PUMPS 60HZ

Factory

Norwik Power Machinery Co. Ltd
XiangCheng Industrial Zone
SuZhou - Jiangsu - China
P.C. : 215138
+86 512 65771696
sales@norwikpower.com
www.norwikpower.com

Europe and America sales office

Soceve srl
Via E. Fermi, 14/E3
31011 Casella d'Asolo
Treviso - Italy
+39 333 1362161
+39 0423 950531
ventas@soceve.com

NORWIK

CONTENT

Peripheral Pump

QB 01

Centrifugal Pump

CPm 02

HFM 03

DWK 04

Self-priming Pump

JET 06

JS 07

Submersible Pump

QXXX103 08

QXXX103-XP 09

Submersible Dewatering Pump

FSM 10

Submersible Pump

KS 11

Sewage Pump

U 12

Sewage Pump

B 13

Submersible Grinder Pump

G 14

Deep Well Pump

3SDM/4SDM 15

4SPM/6SPM 17

Vertical Multistage Pump

CV 18

Horizontal Multistage Pump

CM 25

Hydromassage Bathtub Pump

WDA 28

Swimming Pool Pump

SWIM 29

SUA 30

SPA Pump

WUA 31

Circulation Pump

RS 32

RS-ER 33

Pumps Accessories

34

Accessories

35

PERIPHERAL PUMP

Peripheral Pumps are suitable for pumping clean water. They are particularly suitable for domestic applications such as supply water from well, pool well, pool etc. They are also suitable for water pressure boosting, gardening and automatic water supplying system if composed with other appliances.

Technical parameter

Model	Voltage	Frequency	Power		Current	H.Max	Q.Max	Size	S.Head	G.W
			kW	HP	amp	m	L/min	inch	m	kg
QB60	110V/220V	60Hz	0.37	0.5	4.9/2.9	36	36	G1"×G1"	8	5
QB70	110V/220V	60Hz	0.55	0.75	6.9/3.5	45	50	G1"×G1"	8	8.7
QB80	110V/220V	60Hz	0.75	1	10/5.5	55	60	G1"×G1"	8	9.7

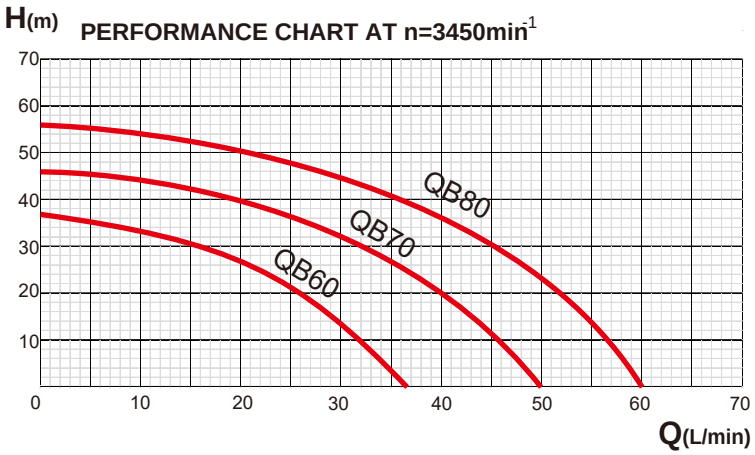

Brass antiblock system

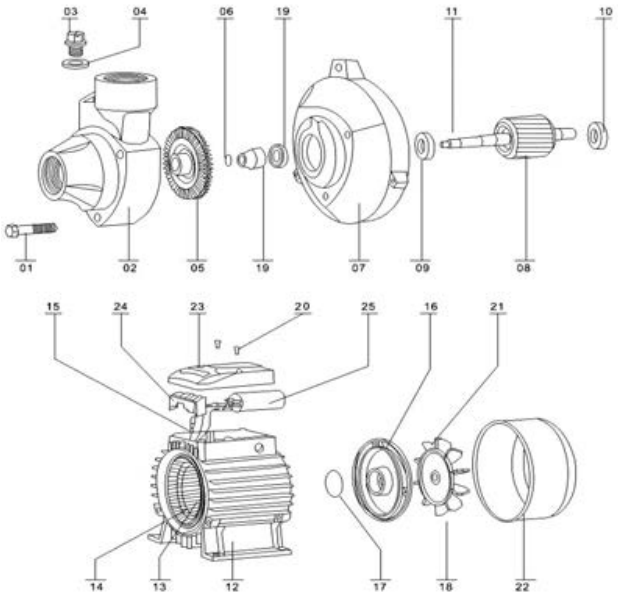

EXPLODED VIEW DRAWING - SPARE PARTS

No.	Description.	No.	Description.
1	Screw	14	Stator Coil
2	Pump Body	15	Connection Wire
3	Flit Plug Screw	16	Motor End cover
4	Seal	17	Spring Washer
5	Impeller	18	Screw
6	Locking Ring	19	Mechanical Seal
7	Motor Front cover	20	Screw
8	Motor Rotor	21	Fan
9	Ball Bearing	22	Fan Cover
10	Ball Bearing	23	Terminal Cover
11	Locking Unit	24	Terminal Block
12	Motor Body	25	Capacitor
13	Stator		

available also in 50HZ

CENTRIFUGAL PUMP

Centrifugal Pumps are suitable for both domestic and industrial applications to convey clean liquids and non-aggressive chemical fluids. These pumps are characterized by low head and high capacity.

Technical parameter

Model	Voltage	Frequency	Power		Current	H.Max	Q.Max	Size	S.Head	G.W
			kW	HP	amp	m	L/min	inch	m	kg
CPm130	110V/220V	60Hz	0.37	0.5	5.9/2.9	18	80	G1"×G1"	8	8.6
CPm146	110V/220V	60Hz	0.55	0.75	6.9/3.5	26	110	G1"×G1"	8	11
CPm158	110V/220V	60Hz	0.75	1	10/5.5	30	118	G1"×G1"	8	12.3

H(m) **PERFORMANCE CHART AT n=3450min^{-1}**

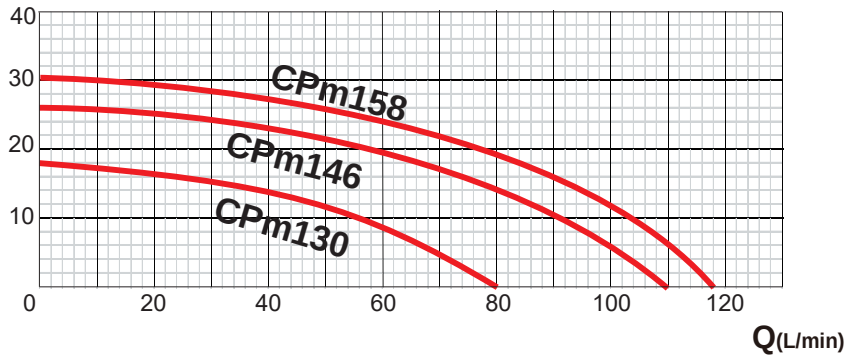

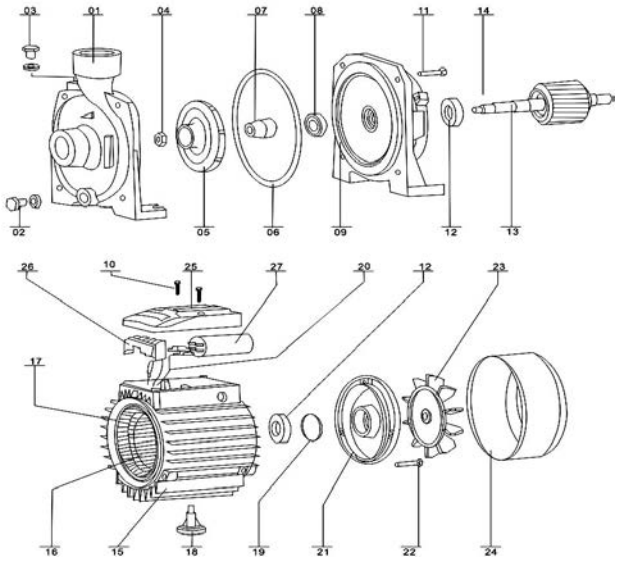

EXPLODED VIEW DRAWING - SPARE PARTS

No.	Description.	No.	Description
1	Pump Body	15	Motor Body
2	Screw	16	Stator
3	Flit Plug Screw	17	Stator Coil
4	Looking nut	18	Motor Foot
5	Impeller	19	Spring Washer
6	O Ring	20	Connection Wire
7	Mechanical Seal	21	Motor End cover
8	Mechanical Seal	22	Tie Bolt
9	Motor Front cover	23	Fan
10	Screw	24	Fan Cover
11	Screw	25	Terminal Cover
12	Ball Bearing	26	Terminal Block
13	Motor Rotor	27	Capacitor
14	Shaft key		

available also in 50HZ

CENTRIFUGAL PUMP

Centrifugal Pumps are suitable for both domestic and industrial applications to convey clean liquids and non-aggressive chemical fluids. These pumps are characterized by low head and high capacity.

Technical parameter

Model	Voltage	Frequency	Power		Current	H.Max	Q.Max	Size	S.Head	G.W
			kW	HP	amp	m	L/min	inch	m	kg
HFM/1B	110V/220V	60Hz	0.6	0.8	6.9/3.5	16	275	G1.5"×G1.5"	8	12.5
HFM/1A	110V/220V	60Hz	0.75	1	10/5.5	20	275	G1.5"×G1.5"	8	13.5
HFM/5C	110V/220V	60Hz	0.6	0.8	6.9/3.5	12.5	500	G2"×G2"	8	13.8
HFM/5B	110V/220V	60Hz	0.75	1	10/5.5	14	600	G2"×G2"	8	14.0
HFM/5A	110V/220V	60Hz	1.1	1.5	14/7.5	15	650	G2"×G2"	8	14.7
HFM/6C	110V/220V	60Hz	1.1	1.5	14/7.5	12	1100	G3"×G3"	8	26.6
HFM/6B	110V/220V	60Hz	1.5	2	17/8.5	15	1200	G3"×G3"	8	27.8
HFM/6A	220V	60Hz	2.2	3	12	19	1300	G3"×G3"	8	28.6
HFM/7B	220V	60Hz	3	4	14	22	1300	G3"×G3"	8	38.5

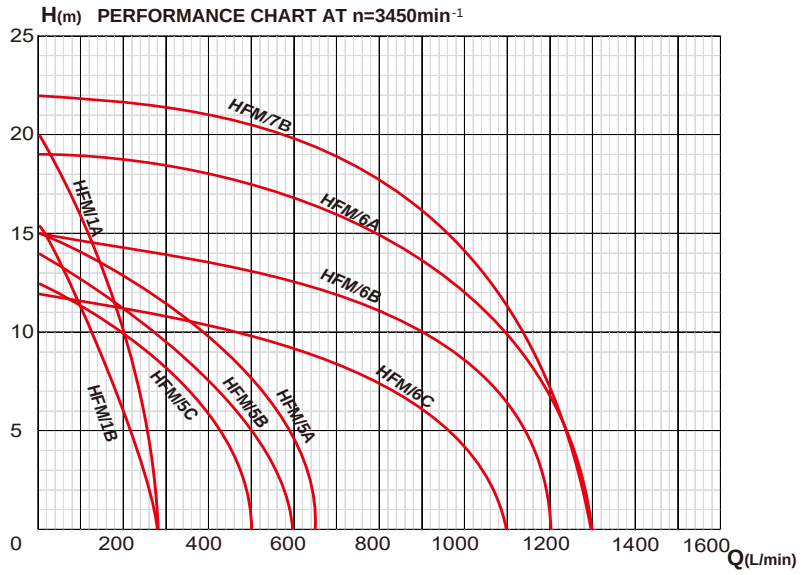

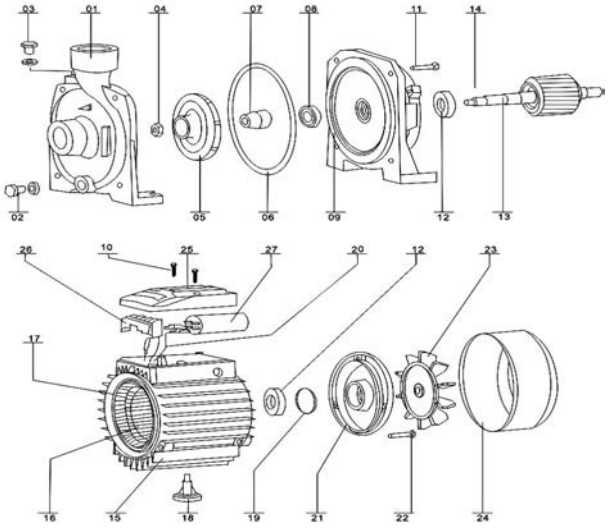

EXPLODED VIEW DRAWING - SPARE PARTS

No.	Description.	No.	Description
1	Pump Body	15	Motor Body
2	Screw	16	Stator
3	Flit Plug Screw	17	Stator Coil
4	Looking nut	18	Motor Foot
5	Impeller	19	Spring Washer
6	O Ring	20	Connection Wire
7	Mechanical Seal	21	Motor End cover
8	Mechanical Seal	22	Tie Bolt
9	Motor Front cover	23	Fan
10	Screw	24	Fan Cover
11	Screw	25	Terminal Cover
12	Ball Bearing	26	Terminal Block
13	Motor Rotor	27	Capacitor
14	Shaft key		

available also in 50HZ

CENTRIFUGAL PUMP

Centrifugal Pumps are suitable for both domestic and industrial applications to convey clean liquids and non-aggressive chemical fluids. These pumps are characterized by low head and high capacity.

Technical parameter

Model	Voltage	Frequency	Power P2		Current	Rated head	Rated flow		
			kW	HP	Amp	m	m³/h	DNA	DNM
DWK025(T)	220V	60HZ	0.25	0.35	2	9	2.4	G 1 1/4"	G 1"
DWK037(T)	220V	60HZ	0.37	0.50	2	9	3.6	G 1 1/4"	G 1"
DWK50(T)	220V	60HZ	0.37	0.50	2	6.5	4.8	G 1 1/4"	G 1"

PERFORMANCE CHART AT n=3450min^{-1}

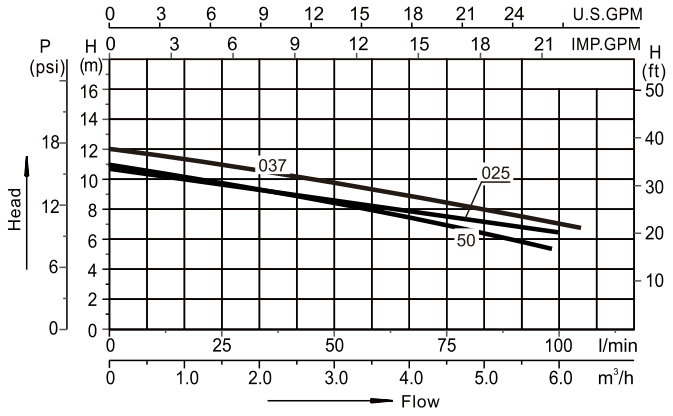

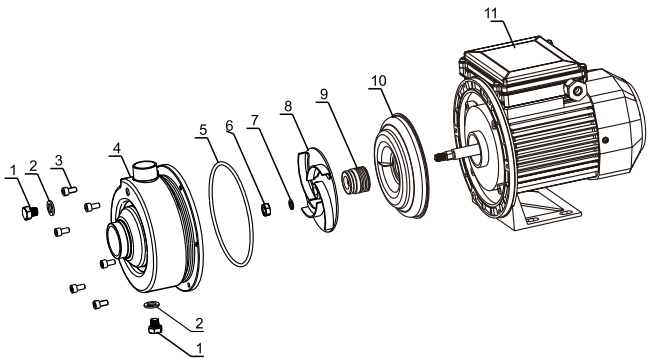

EXPLODED VIEW DRAWING - SPARE PARTS

No.	Description.	No.	Description
1	Plug	7	Spring washer
2	Washer	8	Impeller
3	Inside hexagonal bolt	9	Mechanical seal
4	Pump housring component	10	Pump Cover
5	O-Ring	11	Motor
6	Hexagonal Nut		

available also in 50HZ

CENTRIFUGAL PUMP

Centrifugal Pumps are suitable for both domestic and industrial applications to convey clean liquids and non-aggressive chemical fluids. These pumps are characterized by low head and high capacity.

Technical parameter

Model	Voltage	Frequency	Power P2		Current	Rated head	Rated flow	DNA	DNM	Curves
			kW	HP	Amp	m	m³/h			
DWK100A(T)	220V	60HZ	0.55	0.75	4	7.00	12.00	G1 1/2"	G1 1/2"	1
DWK100(T)	220V	60HZ	0.75	1.00	5	7.00	12.00	G1 1/2"	G1 1/2"	1
DWK120A(T)	220V	60HZ	0.75	1.00	5	10.00	12.00	G1 1/2"	G1 1/2"	2
DWK120(T)	220V	60HZ	1.00	1.40	6	10.00	12.00	G1 1/2"	G1 1/2"	2
DWK150(T)	220V	60HZ	1.10	1.50	7	7.80	18.00	G2"	G2"	3
DWK200(T)	220V	60HZ	1.50	2.00	9	10.50	18.00	G2"	G2"	4
DWK300(T)	220V	60HZ	2.20	3.00	14	11.00	30.00	G2 1/2"	G2"	5

PERFORMANCE CHART AT n=3450min^{-1}

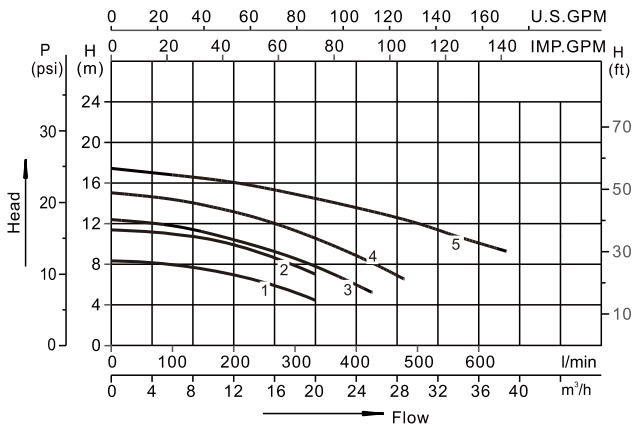

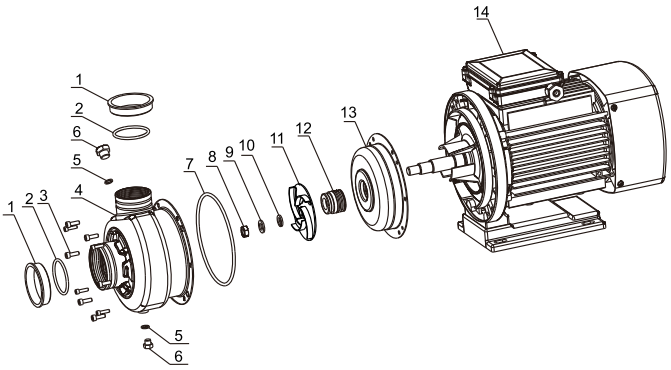

EXPLODED VIEW DRAWING - SPARE PARTS

No.	Description.	No.	Description
1	Dust cap	8	Hexagonal Nut
2	O-Ring	9	Washer
3	Inside hexagonal bolt	10	Spring washer
4	Pump housring component	11	Impeller
5	O-Ring	12	Mechanical seal
6	Plug	13	Pump Cover
7	O-Ring	14	Motor

available also in 50HZ

SELF-PRIMING PUMP

Self-priming Pumps are equipped with a Venturi system.They are suitable to convey clean water and non-aggressive chemical fluids, even with liquid mixed with gas, from well in continuous duty; they are also indicated to increase water pressure in centralized water systems, for small irrigation systems, for watering gardens, for washing systems with water jets, for fountains, etc. It is normally advisable to install a foot valve on the suction end.

Technical parameter

Model	Voltage	Frequency	Power		Current	H.Max	Q.Max	Size	S.Head	G.W
			kW	HP	amp	m	L/min	inch	m	kg
JET60S	110V/220V	60Hz	0.37	0.5	5.9/2.9	35	40	G1"×G1"	9	10
JET80S	110V/220V	60Hz	0.55	0.75	6.9/3.5	44	50	G1"×G1"	9	11
JET100S	110V/220V	60Hz	0.75	1	10/5.5	48	60	G1"×G1"	9	12

H(m) PERFORMANCE CHART AT n=3450min^{-1}

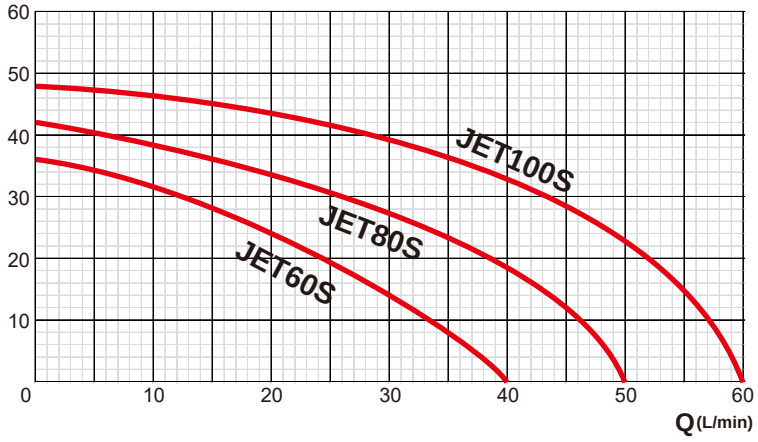

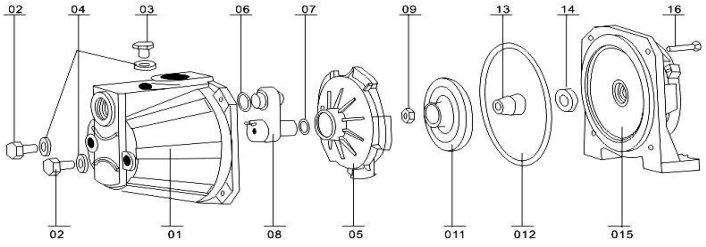

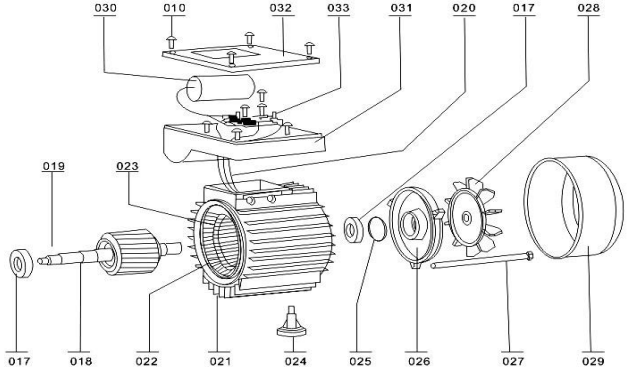

EXPLODED VIEW DRAWING - SPARE PARTS

No.	Description.	No.	Description.
1	Pump Body	18	Motor Rotor
2	Screw	19	Shaft key
3	Flit Plug Screw	20	Connection Wire
4	Seal	21	Motor Rotor
5	Diffuser	22	Stator
6	Seal	23	Stator Coil
7	Seal	24	Motor Foot
8	Nozzle	25	Spring Washer
9	Locking nut	26	Motor End cover
10	Screw	27	Long screw
11	Impeller	28	Fan
12	O ring	29	Fan Cover
13	Mechanical Seal	30	Capacitor
14	Mechanical Seal	31	Terminal box
15	Motor Front cover	32	Terminal cover
16	Screw	33	Terminal block
17	Ball Bearing		

available also in 50HZ

SELF-PRIMING PUMP

Self-priming Pumps are equipped with a Venturi system.They are suitable to convey clean water and non-aggressive chemical fluids, even with liquid mixed with gas, from well in continuous duty; they are also indicated to increase water pressure in centralized water systems, for small irrigation systems, for watering gardens, for washing systems with water jets, for fountains, etc. It is normally advisable to install a foot valve on the suction end.

Technical parameter

Model	Voltage	Frequency	Power		Current	H.Max	Q.Max	Size	S.Head	G.W
			kW	HP	amp	m	L/min	inch	m	kg
JS60	110V/220V	60Hz	0.37	0.5	4.9/2.9	35	38	G1"×G1"	8	6.8
JS80	110V/220V	60Hz	0.55	0.75	6.9/3.5	40	43	G1"×G1"	8	8.2
JS100	110V/220V	60Hz	0.75	1	10/5.5	45	49	G1"×G1"	8	9.2

H(m) PERFORMANCE CHART AT n=3450min^{-1}

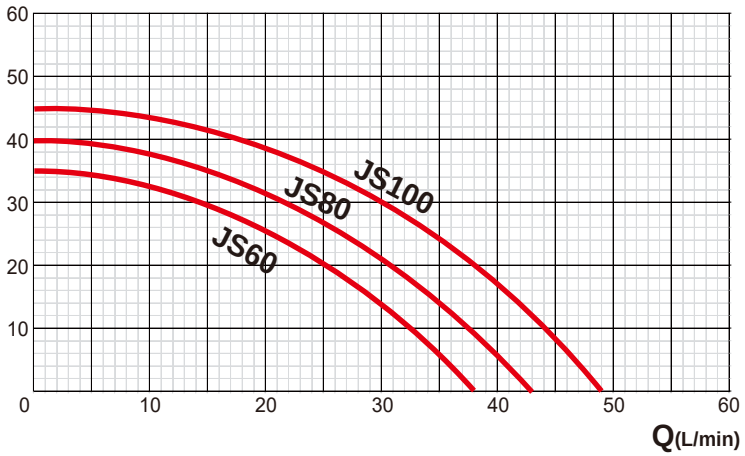

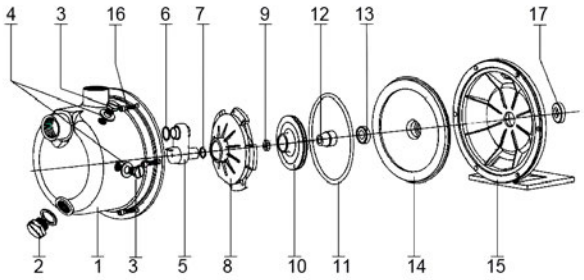

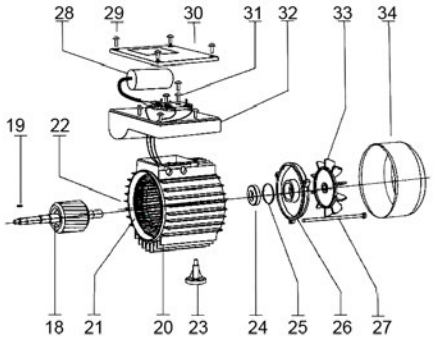

EXPLODED VIEW DRAWING - SPARE PARTS

No.	Description.	No.	Description.
1	Pump Body	18	Motor Rotor
2	Coper Screw	19	Shaft Key
3	Flit Plug Screw	20	Motor Body
4	Seal	21	Stator
5	Fluidic Device	22	Stator Coil
6	Jet Seal	23	Motor Foot
7	Jet Seal	24	Ball Bearing
8	Propelling Sheave	25	Spring Washer
9	Locking Nut	26	Motor End Cover
10	Impeller	27	Tle Bolt
11	O Ring	28	Capacitor
12	Mechanical Seal	29	Terminal Box Screw
13	Mechanical Seal	30	Terminal Cover
14	Pump Cover Board	31	Screw
15	Motor Front Cover	32	Terminal Box
16	Screw	33	Fan
17	Ball Bearing	34	Fan cover

available also in 50HZ

SUBMERSIBLE PUMP

Submersible Pumps with floater switch and top water discharge for clean water. They are available with plastic or stainless steel main pump body.

Technical parameter

Model	Voltage	Frequency	Power		Current	H.Max	Q.Max	Size	S.Head	G.W
			kW	HP	amp	m	m³/h	inch	m	kg
Q250103	220V	60Hz	0.25	0.33	1.2	5.5	6	G1" - G1 1/4"	7	4.4
Q400103	220V	60Hz	0.4	0.5	1.7	8	8	G1" - G1 1/4"	7	4.6
Q550103	220V	60Hz	0.6	0.8	2.3	8	11	G1" - G1 1/4"	7	5.6
Q750103	220V	60Hz	0.8	1.0	2.6	8.5	12.5	G1" - G1 1/4"	7	5.8

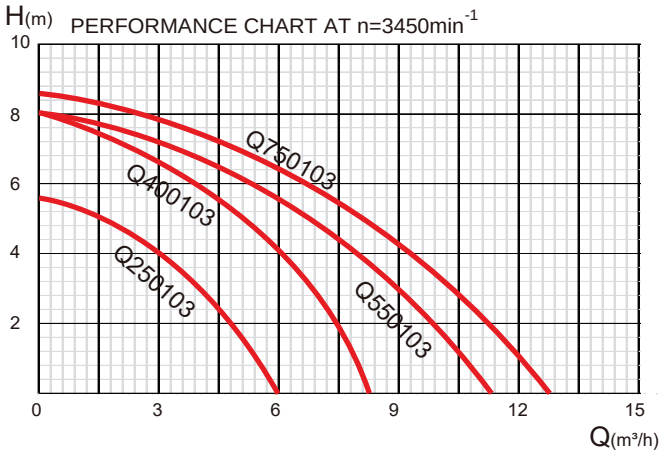

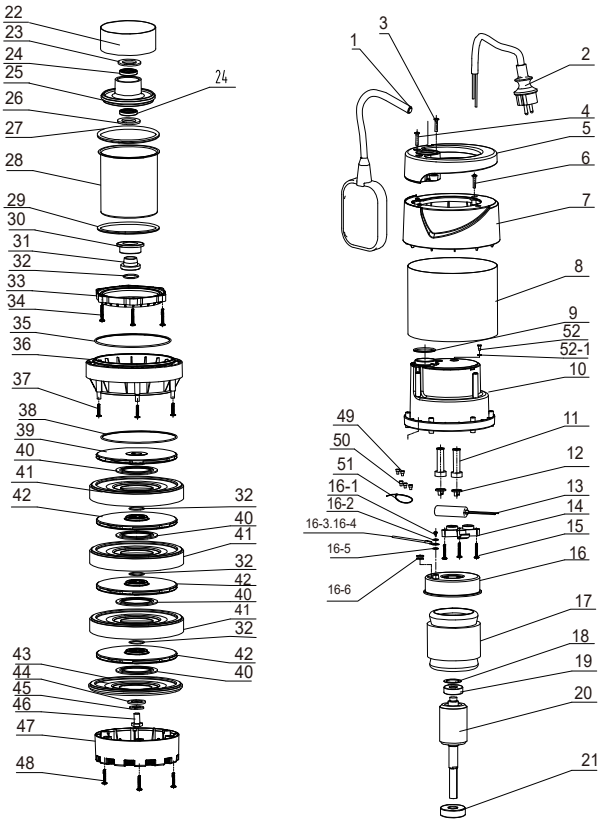

EXPLODED VIEW DRAWING - SPARE PARTS

NO.	Description	NO.	Description
1	Floater Swtich	25	Lower Bearing Block
2	Cable	26	Gasket
3	Tapping Screw	27	O Ring
4	Tapping Screw	28	Front Cover
5	Handle	29	O Ring
6	Tapping Screw	30	Mechanical Sealing
7	End Cap	31	Shaft Sleeve
8	SSteel Housing	32	O Ring
9	O Ring	33	End Ring
10	Rear Pump Shell	34	Tapping Screw
11	Cable Sheath	35	O Ring
11-1	Cable Sheath	36	Main Pump Shell
12	Cable Lock Block	37	Tapping Screw
13	Capacitor 35μF	38	O Ring
14	Cable Lock Block	39	Impeller
15	Sp.Tapping Screw	40	Plastic Mat
16	Alu rear cover	41	Guide Disk
16-1	Screw	42	Impeller
16-2	Elastic Gasket	43	Guide Disk Cover
16-3	Yellow Green Line	44	Flat Gasket
16-4	Blade Terminal	45	Elastic Gasket
16-5	Gasket	46	Hexagon Bolt
16-6	Lead Sheath	47	Base
17	Stator	48	Tapping Screw
18	Corrugated Gasket	49	Nylon close/end wire
19	Bearing	50	Nylon close/end wire
20	Rotor	51	Ribbon
21	Bearing	52	Tapping Screw
22	Spacer	52-1	O Ring
23	Adjustable Gasket	53	White Grease
24	Skeleton Sealing	54	Dust Cap

available also in 50HZ

SUBMERSIBLE PUMP

Submersible Pumps with multi-stage impeller and floater switch for clean water. 800W version with 3 impellers can reach max pump head of 30m. 1000W version with 4 impellers can reach max pump head of 40m.

Technical parameter

Model	Voltage	Frequency	Power		Current	H.Max	Q.Max	Size	S.Head	G.W
			kW	HP	amp	m	m³/h	inch	m	kg
Q800103-3P	220V	60Hz	0.8	1.1	3.8	30	5.5	G1"	7	8.3
Q1000103-4P	220V	60Hz	1.0	1.3	5.2	40	5.5	G1"	7	9.0

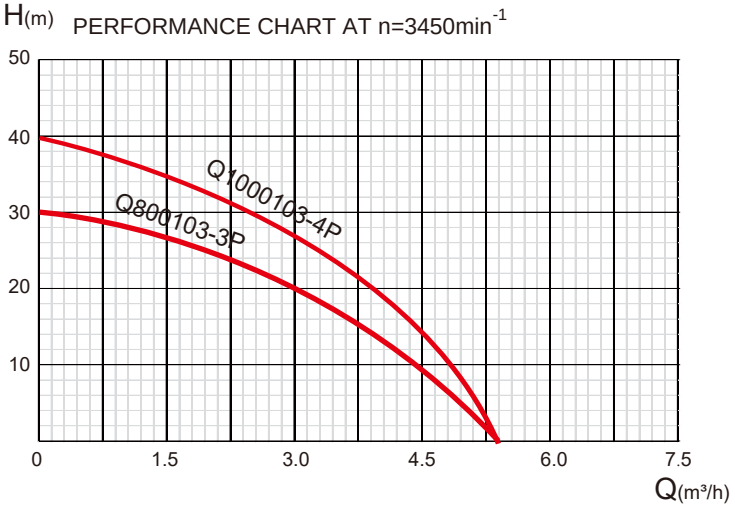

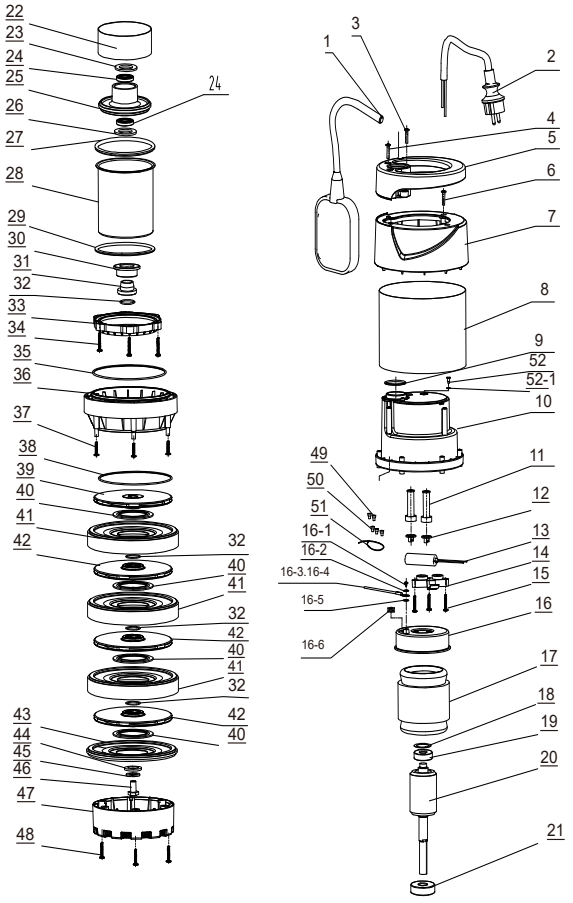

EXPLODED VIEW DRAWING - SPARE PARTS

NO.	Description	NO.	Description
1	Floater Swtich	25	Lower Bearing Block
2	Cable	26	Gasket
3	Tapping Screw	27	O Ring
4	Tapping Screw	28	Front Cover
5	Handle	29	O Ring
6	Tapping Screw	30	Mechanical Sealing
7	End Cap	31	Shaft Sleeve
8	SSteel Housing	32	O Ring
9	O Ring	33	End Ring
10	Rear Pump Shell	34	Tapping Screw
11	Cable Sheath	35	O Ring
11-1	Cable Sheath	36	Main Pump Shell
12	Cable Lock Block	37	Tapping Screw
13	Capacitor 35μF	38	O Ring
14	Cable Lock Block	39	Impeller
15	Sp.Tapping Screw	40	Plastic Mat
16	Alu rear cover	41	Guide Disk
16-1	Screw	42	Impeller
16-2	Elastic Gasket	43	Guide Disk Cover
16-3	Yellow Green Line	44	Flat Gasket
16-4	Blade Terminal	45	Elastic Gasket
16-5	Gasket	46	Hexagon Bolt
16-6	Lead Sheath	47	Base
17	Stator	48	Tapping Screw
18	Corrugated Gasket	49	Nylon close-end wiri
19	Bearing	50	Nylon close-end wiri
20	Rotor	51	Ribbon
21	Bearing	52	Tapping Screw
22	Spacer	52-1	O Ring
23	Adjustable Gasket	53	White Grease
24	Skeleton Sealing	54	Dust Cap

available also in 50HZ

SUBMERSIBLE DEWATERING PUMP

Submersible dewatering pumps are equipped with a Semi Vortex impeller designed to minimize the clogging situation. This ensures maximum durability and helps to maintain pump performance.
Built-in shaft mounted agitator prevents the "air lock" and reduces the clogging situation.
Application: civil engineering, building sites, basements or utility pits. Liquids: rainwater, mud water and highly corrosive fluids.

Technical parameter

Model	Voltage	Frequency	Power		Current	H.Max	Q.Max	Size	G.W
			kW	HP	amp	m	m³/h	inch	kg
FS(M)2.4(F)	110V	60Hz	0.4	0.6	6	12	12.6	NPT2"	14.5
FS(M)2.75(F)	110V	60Hz	0.75	1	10	19	15	NPT2"	17.5
FS(M)3.75(F)	110V	60Hz	0.75	1	10	18	18	NPT3"	19

H(m) PERFORMANCE CHART AT n=3450min^{-1}

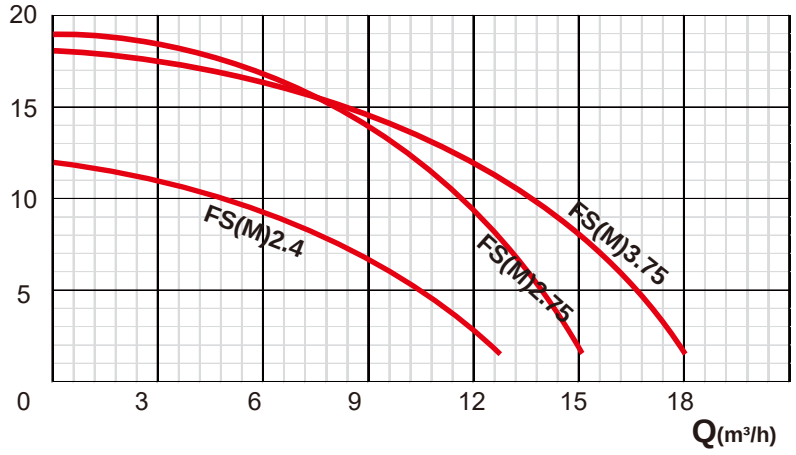

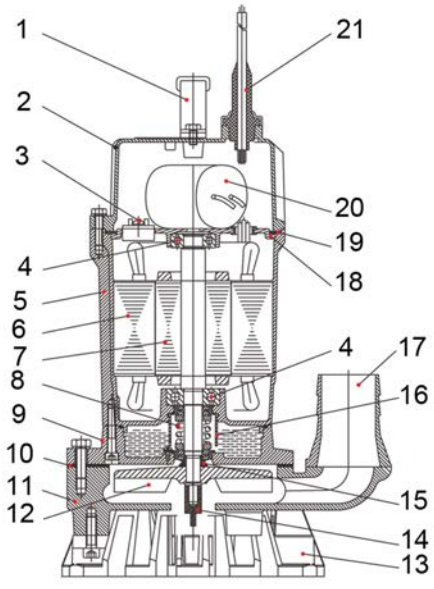

EXPLODED VIEW DRAWING - SPARE PARTS

No.	Description	No.	Description
1	Handle	12	Impeller
2	Motor cover	13	End stand
3	Motor protector	14	Stirrer
4	Bearing	15	Sand guard
5	Motor body	16	Drainage devive
6	Stator	17	Hose coupling
7	Rotor	18	Up - cover
8	Mechanical seal	19	Gasket
9	Plate	20	Capacitor
10	Gasket	21	Cable
11	Pump body		

available also in 50HZ

SUBMERSIBLE PUMP

Submersible pumps Compact design, high performance and exceptional durability for handling abrasive liquid, widely used in general construction and civil engineering.
The body of motor and pump is made from cast iron or stainless steel for long-lasting durability.
Greatly increased maximum submersion depth due to mechanical seal resistant to high pressure (0.5 Mpa).

Technical parameter

Model	Voltage	Frequency	Power		Current	H.Max	Q.Max	Size	G.W
	V	Hz	kW	HP	Amp	m	m³/h	Inch	Kg
KSM21.5(F)	220	60	1.5	2	10	22	27	NPT2"	37
KSM31.5(F)	220	60	1.5	2	10	14	42	NPT3"	37
KS21.5	380	60	1.5	2	3.5	22	27	NPT2"	37
KS21.5F	380	60	1.5	2	3.5	22	27	NPT2"	39
KS31.5	380	60	1.5	2	3.5	14	42	NPT3"	37
KS31.5F	380	60	1.5	2	3.5	14	42	NPT3"	39
KS22.2	380	60	2.2	3	5.1	26	31	NPT2"	40
KS22.2F	380	60	2.2	3	5.1	26	31	NPT2"	42
KS32.2	380	60	2.2	3	5.1	19	47	NPT3"	40
KS32.2F	380	60	2.2	3	5.1	19	47	NPT3"	42
KS23.7	380	60	3.7	5	8.0	32	42	NPT2"	58
KS23.7F	380	60	3.7	5	8.0	32	42	NPT2"	60
KS33.7	380	60	3.7	5	8.0	31	57	NPT3"	58
KS33.7F	380	60	3.7	5	8.0	31	57	NPT3"	60
KS43.7	380	60	3.7	5	8.0	18	95	NPT4"	59
KS43.7F	380	60	3.7	5	8.0	18	95	NPT4"	61
KS35.5	380	60	5.5	7.5	11.6	38	69	NPT3"	69
KS35.5F	380	60	5.5	7.5	11.6	38	69	NPT3"	68
KS45.5	380	60	5.5	7.5	11.6	23	105	NPT4"	67
KS45.5F	380	60	5.5	7.5	11.6	23	105	NPT4"	69

H(m) PERFORMANCE CHART AT n=3450min^{-1}

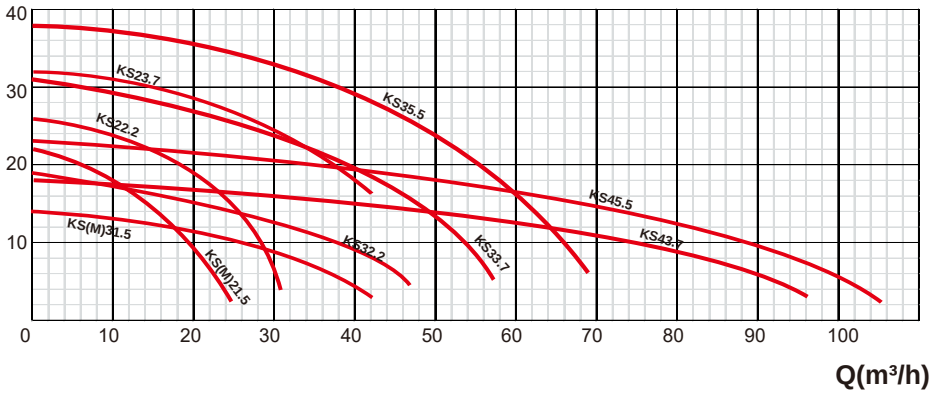

Q(m³/h)

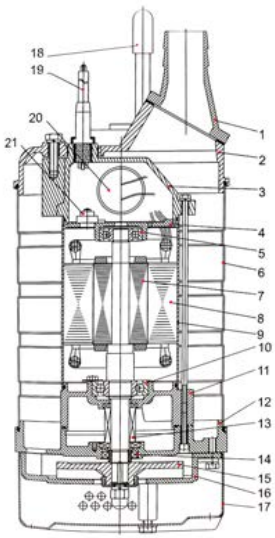

EXPLODED VIEW DRAWING - SPARE PARTS

No.	Description	No.	Description
1	Hose coupling	12	Plate
2	Upper cover	13	Mechanical seal
3	Motor cover	14	Oil seal bracket
4	Bearing house	15	Impeller
5	Bearing	16	Pump body
6	Pump casing	17	Filter
7	Rotor	18	Handle
8	Stator	19	Cable
9	Motor body	20	Capacitor
10	Bearing	21	Motor protector
11	Bearing house		

available also in 50HZ

SEWAGE PUMP

Sewage pumps The vortex impeller resides out of volute: therefore any solid that can enter the inlet is able to traverse the channel via vortex action. The Sic Mechanical Seal has great wear resistance.
Watertight cable entry system protects the motor from water and moisture in case of cable damaged and submerged.
Built-in thermal protector automatically stops pump in event of open phase, short circuit, overloading and overheating.

Technical parameter

Model	Voltage	Frequency	Power		Current	H.Max	Q.Max	Size	G.W
			kW	HP	Amp	m	m³/h	Inch	Kg
80U45.4	380V	60Hz	5.5	7.5	11.7	15	95	NPT3"	145
100U45.5	380V	60Hz	5.5	7.5	11.7	14	135	NPT4"	149
80U47.5	380V	60Hz	7.5	10	15.7	17	110	NPT3"	161
100U47.5	380V	60Hz	7.5	10	15.7	15	165	NPT4	165
100U411	380V	60Hz	11	15	22	18	190	NPT4"	170

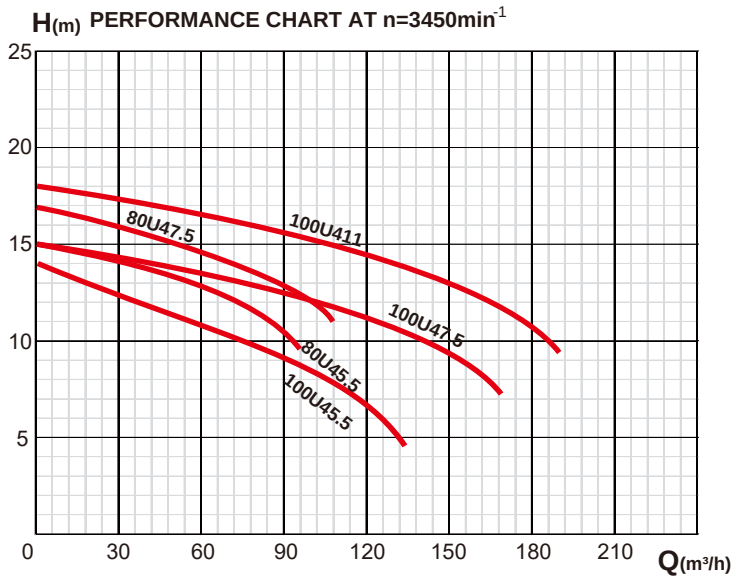

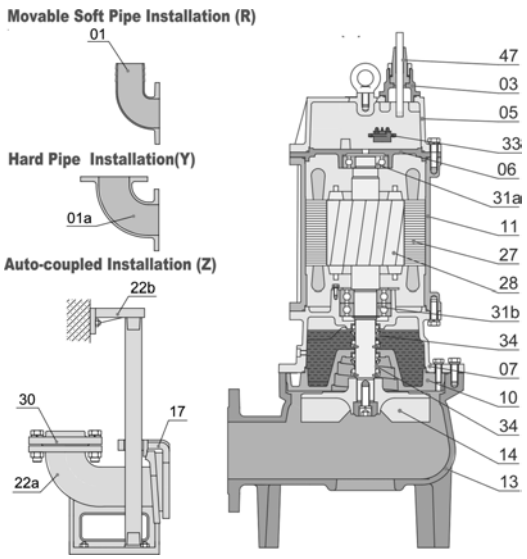

EXPLODED VIEW DRAWING - SPARE PARTS

No.	Description	No.	Description
01	Hose coupling	22a	Coupling seat
01a	Hose coupling	22b	Upper guide support
03	Teminal box	27	Stator
05	Upper cover	28	Rotor
06	Up-Bearing house	30	Flange
07	Bearing house	31a	Bearing
10	Seal bracket	31b	Bearing
11	Motor body	33	Motor protector
13	Pump body	34	Mechanical seal
14	Impeller	47	Cable
17	Coupling adapter		

available also in 50HZ

SEWAGE PUMP

Sewage pumps Non-clogging double vane impeller can pump large solids. They cover a full range of head. Chrome plating of shaft ensure high corrosion resistance and wear resistance.
Designed for pumping sewage, waste water, rainwater and living water containing solid grains, various fabric, sludge and solid.

Technical parameter

Model	Voltage	Frequency	Power		Current	H.Max	Q.Max	Size	G.W
			kW	HP	Amp	m	m³/h	Inch	Kg
50B27.5	380V	60Hz	7.5	10	15.7	52	37	NPT2"	129
80B27.5	380V	60Hz	7.5	10	15.7	40	80	NPT3"	134
100B27.5	380V	60Hz	7.5	10	15.7	34/30	110	NPT4"	140
150B27.5	380V	60Hz	7.5	10	15.7	20/18	160/135	NPT6"	154
80B211	380V	60Hz	11	15	22	48	110	NPT3"	147
100B211	380V	60Hz	11	15	22	48/46	125	NPT4"	151
150B211	380V	60Hz	11	15	22	29/27	200/185	NPT6"	165

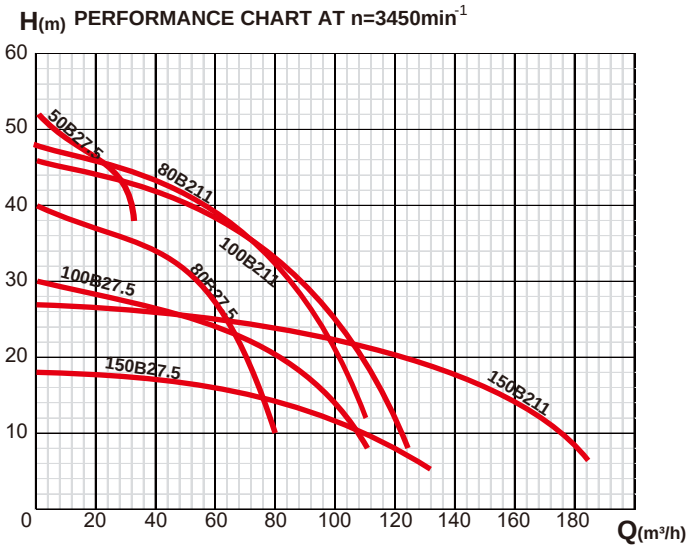

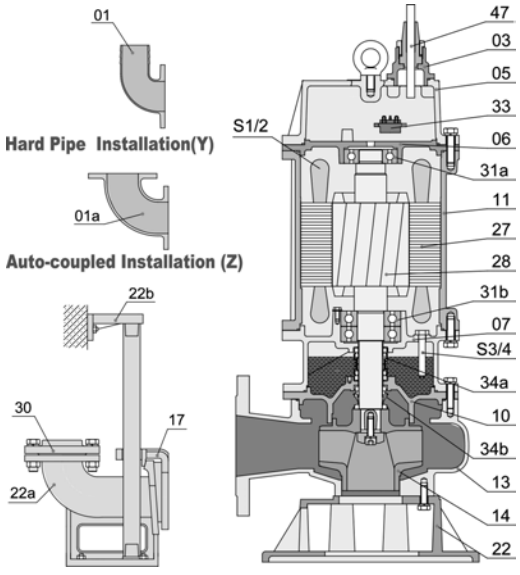

EXPLODED VIEW DRAWINGS - SPARE PARTS

No.	Description	No.	Description
01	Hose coupling	22a	Coupling seat
01a	Hose coupling	22b	Upper guide support
03	Terminal box	27	Stator
05	Upper cover	28	Rotor
06	Up-Bearing house	30	Flange
07	Bearing house	31a	Bearing
10	Seal bracket	31b	Bearing
11	Motor body	33	Motor protector
13	Pump body	34a	Mechanical seal
14	Impeller	34b	Mechanical seal
17	Coupling adapter	47	Cable
22	Seat assembly		

available also in 50HZ

SUBMERSIBLE GRINDER PUMP

Submersible grinder pumps utilize a grinding mechanism in the suction port to crush solid residuals into fine particles before discharging the waste.
Solid residuals are finely grinded by the built-in grinder mechanism and discharged by a vortex impeller.

Technical parameter

Model	Voltage	Frequency	Power		Current	H.Max	Q.Max	Size	G.W
	V	Hz	kW	HP	Amp	m	m³/h	Inch	Kg
40G2.75	380V	60Hz	0.75	1	2	15	12	NPT1 1/2"	24.5
40G2.75S	220V	60Hz	0.75	1	5.2	15	12	NPT1 1/2"	25.5
40G21.1	380V	60Hz	1.1	1.5	2.8	17	13	NPT1 1/2"	26
40G21.1S	220V	60Hz	1.1	1.5	7.2	17	13	NPT1 1/2"	27
40G21.5	380V	60Hz	1.5	2	3.2	18	18	NPT1 1/2"	39
40G22.2	380V	60Hz	2.2	3	5	26	20	NPT1 1/2"	41.5
50G23.7	380V	60Hz	3.7	5	8.5	30	25	NPT2"	58
50G25.5	380V	60Hz	5.5	7.5	11.7	42	25	NPT2"	71

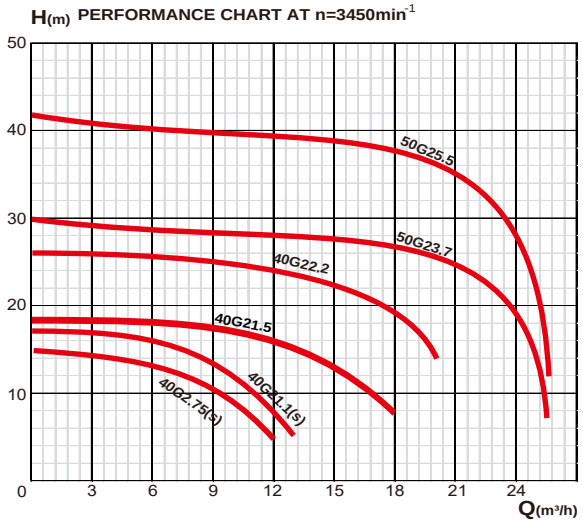

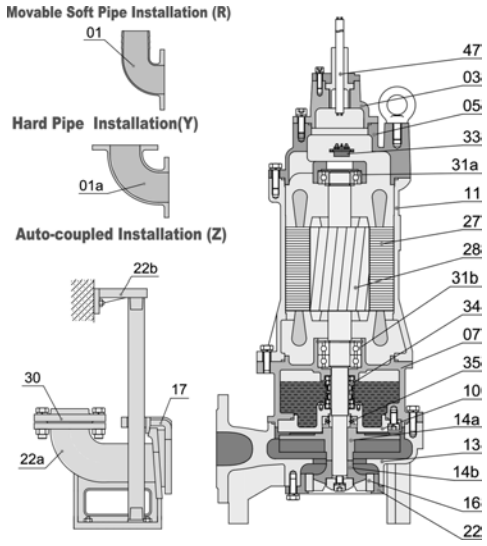

EXPLODED VIEW DRAWING - SPARE PARTS

No.	Description	No.	Description
01	Hose coupling	22	Seat assembly
01a	Hose coupling	22a	Coupling seat
03	Terminal box	22b	Upper guide support
05	Upper cover	27	Stator
07	Bearing house	28	Rotor
10	Seal bracket	30	Flange
11	Motor body	31a	Bearing
13	Pump body	31b	Bearing
14a	Impeller	33	Motor protector
14b	Rotationary blade	34	Mechanical seal
16	Stationary blade	35	Oil seal
17	Coupling adapter	47	Cable

available also in 50HZ

DEEP WELL PUMP

Deep well pumps are used for pumpin water from wells or reservoirs, for domestic use, for home and industrial applications, for garden use and irrigation

Technical parameter

Model		Frequency	Power P2		PERFORMANCE AT n≈3450 rpm													
1～	3～		kW	HP	Q	m³/h	0	0.3	0.6	0.9	1.2	1.5	1.8	2.1	2.4	2.7	3	3.3	3.6
110V/220V	220V/380V					l/min	0	5	10	15	20	25	30	35	40	45	50	55	60
3SDM2/6	3SD2/6	60Hz	0.25	0.33	H(m)		38	37	37	37	36	35	33	31	28	24	20	16	11
3SDM2/9	3SD2/9	60Hz	0.37	0.5			56	56	56	55	54	52	49	46	41	36	30	24	16
3SDM2/13	3SD2/13	60Hz	0.55	0.75			81	81	81	80	78	75	71	66	60	52	44	35	24
3SDM2/17	3SD2/17	60Hz	0.75	1			107	106	105	104	102	98	93	87	78	68	57	45	31
3SDM2/21	3SD2/21	60Hz	0.92	1.25			132	131	130	129	126	121	115	107	97	84	71	56	38
3SDM2/25	3SD2/25	60Hz	1.1	1.5			157	156	155	153	150	144	137	127	115	100	84	67	46
3SDM2/28	3SD2/28	60Hz	1.5	2			175	175	174	172	168	161	154	143	129	112	94	75	51
3SDM2/30	3SD2/30	60Hz	1.5	2			188	187	186	184	180	173	165	153	138	120	101	80	55

Model		Frequency	Power P2		PERFORMANCE AT n≈3450 rpm													
1～	3～		kW	HP	Q	m³/h	0	0.6	1.2	1.8	2.4	3	3.6	4.2				
110V/220V	220V/380V					l/min	0	5	10	15	20	25	30	35				
3SDM3/5	3SD3/5	60Hz	0.25	0.33	H(m)		29	29	28	27	25	23	18	13				
3SDM3/8	3SD3/8	60Hz	0.37	0.5			47	46	45	43	39	36	29	20				
3SDM3/11	3SD3/11	60Hz	0.55	0.75			64	63	61	59	54	50	40	28				
3SDM3/14	3SD3/14	60Hz	0.75	1			82	81	78	75	69	63	51	35				
3SDM3/18	3SD3/18	60Hz	0.92	1.25			105	104	100	97	88	81	65	45				
3SDM3/21	3SD3/21	60Hz	1.1	1.5			123	121	117	113	103	95	76	53				
3SDM3/23	3SD3/23	60Hz	1.5	2			135	133	128	124	113	104	83	58				
3SDM3/25	3SD3/25	60Hz	1.5	2			146	144	139	135	123	113	90	63				

Model		Frequency	Power P2		PERFORMANCE AT n≈3450 rpm													
1～	3～		kW	HP	Q	m³/h	0	0.6	1.2	1.8	2.4	3	3.6	4.2	4.8	5.4	6	6.6
110V/220V	220V/380V					l/min	0	10	20	30	40	50	60	70	80	90	100	110
3SDM4/4	3SD4/4	60Hz	0.25	0.33	H(m)		24	24	23	23	23	22	20	19	16	14	11	8
3SDM4/6	3SD4/6	60Hz	0.37	0.5			36	35	35	35	34	32	31	28	25	21	17	14
3SDM4/8	3SD4/8	60Hz	0.55	0.75			48	47	47	46	45	43	41	37	33	28	23	16
3SDM4/10	3SD4/10	60Hz	0.75	1			59	59	58	58	57	54	51	47	41	35	28	19
3SDM4/13	3SD4/13	60Hz	0.92	1.25			77	77	76	75	74	70	66	61	53	46	37	25
3SDM4/15	3SD4/15	60Hz	1.1	1.5			89	88	88	87	85	81	77	70	62	53	43	29
3SDM4/18	3SD4/18	60Hz	1.5	2			107	106	105	104	102	97	92	84	74	63	51	35

Model		Frequency	Power P2		PERFORMANCE AT n≈3450 rpm													
1～	3～		kW	HP	Q	m³/h	0	0.6	1.2	1.8	2.4	3	3.6	4.2	4.8			
110V/220V	220V/380V					l/min	0	10	20	30	40	50	60	20	80			
4SDM3/5	4SD3/5	60Hz	0.37	0.5	H(m)		52	51	51	48	43	38	30	23	12			
4SDM3/7	4SD3/7	60Hz	0.55	0.75			72	72	71	67	61	53	42	32	17			
4SDM3/9	4SD3/9	60Hz	0.75	1			93	92	91	86	78	68	54	41	22			
4SDM3/11	4SD3/11	60Hz	0.92	1.25			114	113	112	105	95	83	66	50	27			
4SDM3/13	4SD3/13	60Hz	1.1	1.5			135	133	132	124	112	98	78	59	32			
4SDM3/15	4SD3/15	60Hz	1.3	1.75			155	154	152	143	130	113	90	68	37			
4SDM3/17	4SD3/17	60Hz	1.5	2			176	174	173	162	147	128	102	76	42			
4SDM3/20	4SD3/20	60Hz	1.8	2.5			207	205	203	191	173	151	120	90	49			
4SDM3/24	4SD3/24	60Hz	2.2	3			248	246	244	229	208	181	144	108	59			
	4SD3/28	60Hz	2.6	3.5			290	287	284	267	242	211	168	126	69			
	4SD3/32	60Hz	3	4			331	328	325	306	277	242	192	144	78			
	4SD3/36	60Hz	3.7	5			373	369	365	344	311	272	216	162	88			
	4SD3/40	60Hz	4	5.5			414	410	406	382	346	302	240	180	98			

Model		Frequency	Power P2		PERFORMANCE AT n≈3450 rpm													
1～	3～		kW	HP	Q	m³/h	0	0.6	1.2	1.8	2.4	3	3.6	4.2	4.8	5.4	6.0	
110V/220V	220V/380V					l/min	0	10	20	30	40	50	60	20	80	90	100	
4SDM4/4	4SD4/4	60Hz	0.37	0.5	H(m)		42	42	40	40	38	36	32	28	23	17	11	
4SDM4/5	4SD4/5	60Hz	0.55	0.75			53	52	51	50	48	44	39	34	28	21	13	
4SDM4/7	4SD4/7	60Hz	0.75	1			74	73	71	70	67	62	55	48	40	30	19	
4SDM4/10	4SD4/10	60Hz	1.1	1.5			106	104	101	100	96	89	79	69	57	42	27	
4SDM4/13	4SD4/13	60Hz	1.5	2			137	136	131	130	124	116	103	90	74	55	35	
4SDM4/15	4SD4/15	60Hz	1.8	2.5			158	157	152	150	143	133	118	103	95	63	40	
4SDM4/18	4SD4/18	60Hz	2.2	3			190	188	182	180	172	160	142	124	102	76	48	
	4SD4/21	60Hz	2.6	3.5			222	219	212	210	201	187	166	145	119	89	56	
	4SD4/24	60Hz	3	4			253	251	243	240	229	213	189	165	136	101	64	
	4SD4/28	60Hz	3.7	5			296	292	283	280	268	249	221	193	159	118	75	
	4SD4/31	60Hz	4	5.5			327	324	313	310	296	276	245	214	176	131	83	
	4SD4/35	60Hz	5	7			369	366	354	350	334	311	276	241	198	148	93	
	4SD4/39	60Hz	5.5	7.5			412	407	394	390	373	347	308	269	221	165	104	

available also in 50HZ

DEEP WELL PUMP

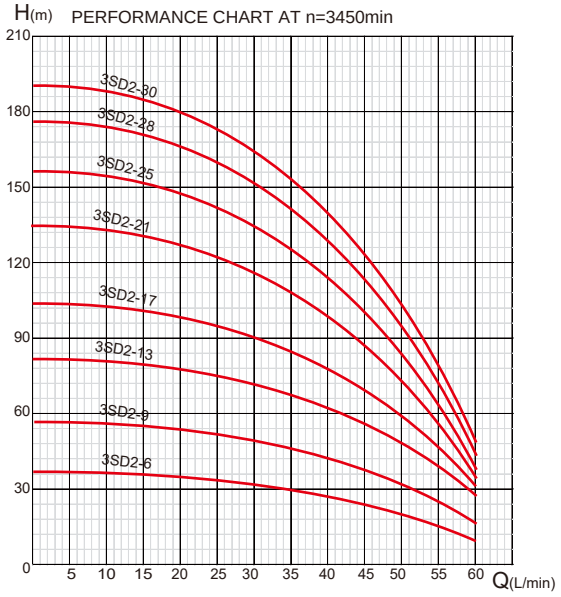

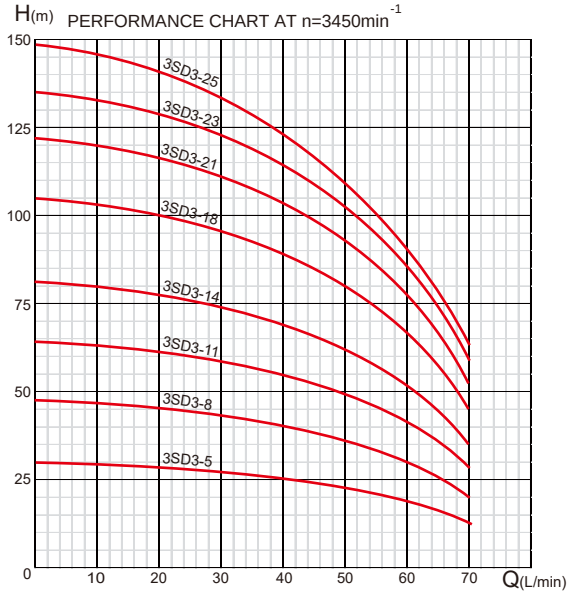

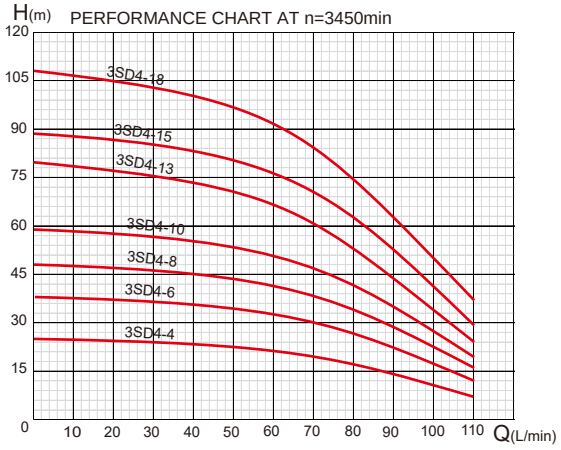

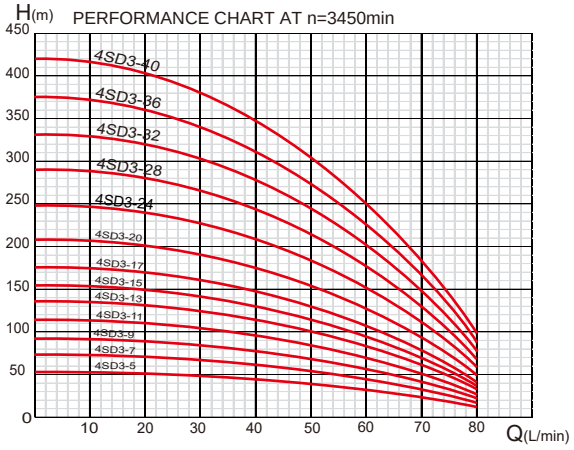

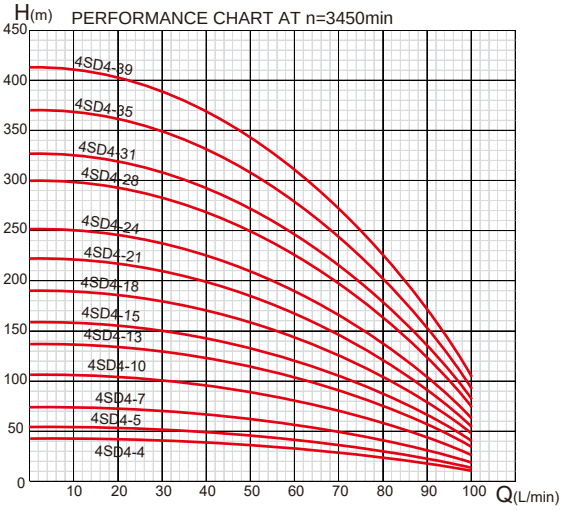

3SD

4SD

available also in 50HZ

DEEP WELL PUMP

Deep well pumps are used for pumpin water from wells or reservoirs, for domestic use, for home and industrial applications, for garden use and irrigation

Technical parameter

Model		Frequency	Power P2		PERFORMANCE AT n≈3450 rpm										
1～	3～		kW	HP	Q	m³/h	0	0.6	1.2	1.8	2.4	3	3.6	4.2	4.8	5.4
110V/220V	220V/380V					l/min	0	10	20	30	40	50	60	70	80	90
4SPM3-4	4SP3-4	60Hz	0.37	0.5	H(m)		37	35	33	32	30	29	26	23	18	13
4SPM3-5	4SP3-5	60Hz	0.55	0.75			46	44	42	41	39	36	33	29	23	17
4SPM3-7	4SP3-7	60Hz	0.75	1			64	61	58	56	53	50	45	39	31	23
4SPM3-9	4SP3-9	60Hz	0.92	1.25			81	77	74	72	69	64	58	50	41	30
4SPM3-11	4SP3-11	60Hz	1.1	1.5			100	95	91	88	84	79	71	62	50	37
4SPM3-13	4SP3-13	60Hz	1.3	1.75			117	112	107	103	99	92	84	73	59	43
4SPM3-15	4SP3-15	60Hz	1.5	2			135	129	124	119	114	107	96	84	68	50
4SPM3-18	4SP3-18	60Hz	1.8	2.5			162	155	149	143	137	128	116	101	81	60
4SPM3-21	4SP3-21	60Hz	2.2	3			189	180	173	167	160	150	135	117	95	70
	4SP3-25	60Hz	2.6	3.5			225	215	206	199	190	177	161	140	113	83
	4SP3-28	60Hz	3	4			252	241	231	223	213	200	180	157	127	93
	4SP3-32	60Hz	3.7	5			288	275	264	255	244	229	206	179	145	106
	4SP3-36	60Hz	4	5.5			324	309	297	286	274	257	232	201	163	119
	4SP3-40	60Hz	5	7			360	344	330	318	305	286	257	224	181	133
	4SP3-44	60Hz	5.5	7.5			396	378	363	350	335	314	283	346	199	146

Model	Frequency	Power P2		PERFORMANCE AT n≈3450 rpm										
3～		kW	HP	Q	m³/h	0	6	12	18	24	30	36	42	48	54
220V/380V					l/min	0	100	200	300	400	500	600	700	800	900
6SP30-3	60Hz	5.5	7.5	H(m)		49	48	46	44	42	38	33	27	20	12
6SP30-4	60Hz	5.5	7.5			65	64	62	59	56	51	45	37	27	16
6SP30-5	60Hz	7.5	10			82	80	77	74	70	64	56	46	34	20
6SP30-6	60Hz	9.2	12.5			98	96	92	89	84	77	67	55	41	24
6SP30-7	60Hz	11	15			114	112	108	103	98	90	78	64	47	28
6SP30-8	60Hz	13	17.5			131	128	123	118	112	103	89	73	54	32
6SP30-9	60Hz	13	17.5			147	144	138	133	125	115	100	82	61	36
6SP30-10	60Hz	15	20			163	160	154	148	139	128	112	92	68	41
6SP30-11	60Hz	18.5	25			180	176	169	163	153	141	123	101	75	45
6SP30-12	60Hz	18.5	25			196	192	185	177	167	154	134	110	81	49
6SP30-13	60Hz	22	30			212	208	200	192	181	167	145	119	88	53
6SP30-14	60Hz	22	30			229	224	215	207	195	180	156	128	95	57
6SP30-15	60Hz	26	35			245	240	231	222	209	193	167	137	102	61
6SP30-16	60Hz	26	35			261	256	246	236	223	205	179	147	108	65
6SP30-17	60Hz	30	40			278	272	262	251	237	218	190	156	115	69
6SP30-18	60Hz	30	40			294	288	277	266	251	231	201	165	122	73

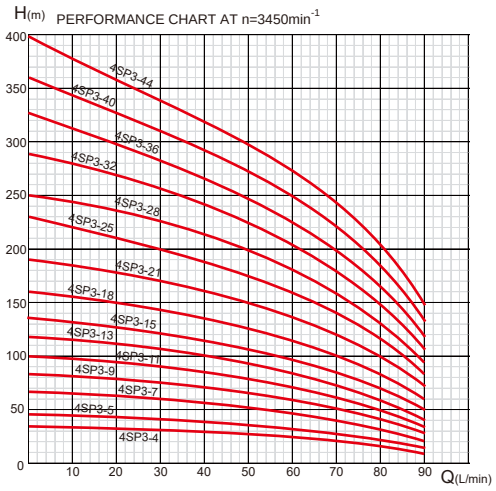

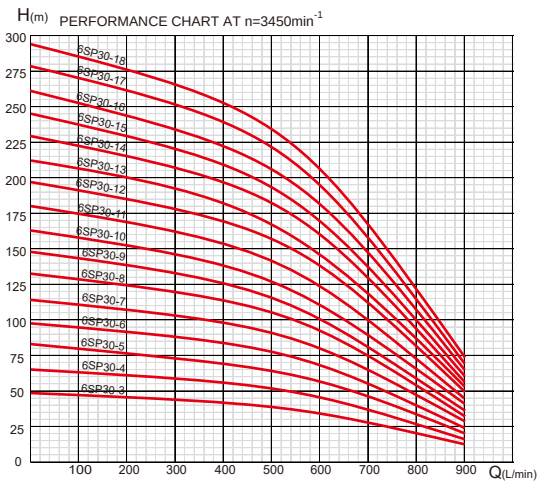

CE

available also in 50HZ

VERTICAL MULTISTAGE PUMP

Vertical multistage pumps are suitable for transferring low viscosity liquids, non-inflammable and non explosive, not containing solid particles or fibers. Water supply & drainage for high-rise buildings, filtration and transfer at waterworks, pressure boosting in main pipe. Washing and cleaning systems, boiler feeding, cooling water circulation, water treatment systems, auxiliary system, support equipment. Ultra filtration systems, reverse-osmosis systems, distillation systems, separators, swimming pools. Agricultural irrigation sprinkler irrigation drop-feed irrigation. Food & beverage industry. Fire fighting system.

Technical parameter

Model	Voltage	Frequency	Power P2(kW)	Q (m³/h)	0.8	1.0	1.2	1.4	1.6	1.8	2.0	2.2	2.4	2.7
CV1-2	220V	60Hz	0.37	H (m)	17	16.7	16.5	16	15	14.5	13.5	13	12	10
CV1-3	220V	60Hz	0.37		25.5	25	24.5	23.5	22.5	22	20	19.5	18	15
CV1-4	220V	60Hz	0.37		34	33	32.5	31.5	30	29	27	26	24	20
CV1-5	220V	60Hz	0.55		42.5	41.5	40.5	40	37.5	36	34	32.5	30	25
CV1-6	220V	60Hz	0.55		51	50	49	47.5	45	44	41	39	36	30
CV1-7	220V	60Hz	0.75		59.5	58	57	55	52.5	51	47	45.5	42	35
CV1-8	220V	60Hz	0.75		68	66.5	65	63	60	58	54	52	48	40
CV1-9	220V	60Hz	0.75		76.5	75	73	71	67.5	65	61	58.5	54	45
CV1-10	220V	60Hz	1.1		85	83	81	79	75	73	68	65	60	50
CV1-11	220V	60Hz	1.1		93.5	91.5	90	87	82.5	80	75	71.5	66	55
CV1-12	220V	60Hz	1.1		102	100	98	95	90	88	82	78	72	60
CV1-13	220V	60Hz	1.1		110	108	106	103	97.5	95	88	84.5	78	65
CV1-15	220V	60Hz	1.5		127	125	122	119	112	109	102	97	90	75
CV1-17	220V	60Hz	1.5		144	142	139	135	127	124	115	110	102	85
CV1-19	220V	60Hz	2.2		161	158	155	150	142	138	129	123	114	95
CV1-21	220V	60Hz	2.2		178	175	171	166	157	153	143	136	126	105
CV1-23	220V	60Hz	2.2		195	192	188	182	172	168	156	149	138	115
CV1-25	220V	60Hz	2.2		212	208	204	198	187	182	170	162	150	125
CV1-27	380V	60Hz	3.0		230	225	220	214	202	197	183	175	162	135

Model	Voltage	Frequency	Power P2(kW)	Q (m³/h)	1.0	1.5	2.0	2.5	3.0	3.5	4.0	4.5
CV2-2	220V	60Hz	0.55	H (m)	25	24	22	21	18	16	12	9
CV2-3	220V	60Hz	0.75		38	35	33	31	27	24	19	15
CV2-4	220V	60Hz	1.1		50	47	44	42	36	32	26	20
CV2-5	220V	60Hz	1.1		63	59	55	52	45	40	32	25
CV2-6	220V	60Hz	1.1		75	70	66	63	54	48	40	30
CV2-7	220V	60Hz	1.5		88	82	77	74	63	56	47	35
CV2-9	220V	60Hz	2.2		113	106	99	95	81	72	59	45
CV2-11	220V	60Hz	2.2		138	129	121	115	99	88	75	56
CV2-13	380V	60Hz	3.0		163	153	143	136	117	104	90	66
CV2-14	380V	60Hz	3.0		175	165	154	147	126	112	95	71
CV2-15	380V	60Hz	3.0		188	177	165	158	135	120	103	77
CV2-18	380V	60Hz	4.0		225	212	198	190	162	144	126	94

Model	Voltage	Frequency	Power P2(kW)	Q (m³/h)	1.5	2.0	2.5	3.0	3.5	4.0	4.5	5.0
CV3-2	220V	60Hz	0.37	H (m)	17.5	17	16	15	13.5	12	10	7.5
CV3-3	220V	60Hz	0.55		26	25	24	22.5	20	18	15	11.5
CV3-4	220V	60Hz	0.55		35	34	32	30	27	24	20	15
CV3-5	220V	60Hz	0.75		43	42	40	38	34	30	25	19
CV3-6	220V	60Hz	1.1		52	50	48	45	41	36	30	23
CV3-7	220V	60Hz	1.1		61	58	56	53	47	42	35	27
CV3-8	220V	60Hz	1.1		70	67	64	60	54	48	40	30
CV3-9	220V	60Hz	1.5		78	75	72	68	61	54	45	34
CV3-10	220V	60Hz	1.5		87	84	80	75	68	60	50	38
CV3-11	220V	60Hz	1.5		96	92	88	83	75	66	55	42
CV3-12	220V	60Hz	2.2		105	101	97	91	82	73	60	46
CV3-13	220V	60Hz	2.2		114	109	104	98	88	49	65	50
CV3-15	220V	60Hz	2.2		131	126	120	114	102	91	75	57
CV3-17	220V	60Hz	2.2		148	143	136	129	115	103	85	65
CV3-19	380V	60Hz	3.0		166	160	152	144	129	115	95	73
CV3-21	380V	60Hz	3.0		184	176	168	159	143	127	105	80
CV3-23	380V	60Hz	3.0		201	193	184	174	156	139	115	88
CV3-25	380V	60Hz	4.0		218	210	200	190	170	151	125	96

available also in 50HZ

VERTICAL MULTISTAGE PUMP

Technical parameter

Model	Voltage	Frequency	Power P2(kW)	Q (m³/h)	2.5	3.0	4.0	5.0	6.0	7.0	8.0	9.0
CV4-2	220V	60Hz	0.75	H (m)	26	25	23	21	19	16	14	11
CV4-3	220V	60Hz	1.1		39	38	36	32	28	24	21	18
CV4-4	220V	60Hz	1.5		52	50	48	44	38	35	31	22
CV4-5	220V	60Hz	2.2		65	62	60	55	49	44	39	27
CV4-6	220V	60Hz	2.2		78	75	72	67	59	54	47	33
CV4-7	380V	60Hz	3.0		92	88	84	78	69	62	55	38
CV4-8	380V	60Hz	3.0		104	100	95	90	79	72	63	44
CV4-10	380V	60Hz	4.0		130	125	120	113	102	90	80	61
CV4-12	380V	60Hz	4.0		156	150	145	136	122	109	96	74
CV4-14	380V	60Hz	5.5		182	176	170	159	145	129	112	86
CV4-16	380V	60Hz	5.5		207	201	196	183	165	146	128	98

Model	Voltage	Frequency	Power P2(kW)	Q (m³/h)	2.0	3.0	4.0	5.0	6.0	7.0	8.0	9.0	10
CV5-2	220V	60Hz	0.55	H (m)	19	18	17.5	16.5	15	14	12	10	8
CV5-3	220V	60Hz	1.1		28	27	26	25	23	21	18	15	12
CV5-4	220V	60Hz	1.1		37	36	35	33	30	27	24	20	16
CV5-5	220V	60Hz	1.5		47	45	44	41	38	34	30	25	20
CV5-6	220V	60Hz	2.2		56	54	52	50	45	41	36	30	24
CV5-7	220V	60Hz	2.2		65	63	61	58	53	48	42	35	28
CV5-8	220V	60Hz	2.2		75	72	70	66	60	55	48	40	32
CV5-9	220V	60Hz	2.2		84	81	78	74	68	62	54	45	36
CV5-10	380V	60Hz	3.0		93	90	87	83	76	69	60	50	40
CV5-11	380V	60Hz	3.0		103	100	96	91	84	76	66	55	44
CV5-12	380V	60Hz	3.0		112	108	104	99	91	83	72	60	48
CV5-13	380V	60Hz	4.0		122	117	113	108	99	90	78	65	52
CV5-14	380V	60Hz	4.0		131	126	122	116	106	96	84	70	56
CV5-15	380V	60Hz	4.0		140	135	130	124	114	103	90	75	60
CV5-16	380V	60Hz	4.0		150	144	139	132	122	110	96	80	64
CV5-18	380V	60Hz	5.5		170	165	157	149	137	117	108	90	72
CV5-20	380V	60Hz	5.5		188	180	174	165	152	124	120	100	80
CV5-22	380V	60Hz	5.5		205	198	191	182	167	131	132	110	88
CV5-24	380V	60Hz	7.5		224	216	209	198	182	138	144	120	96

Model	Voltage	Frequency	Power P2(kW)	Q (m³/h)	7.0	8.0	9.0	10	11	12	13	14	15	16
CV10-1	220V	60Hz	0.75	H (m)	14	13.5	13.3	12.5	12	11.5	11	10	9.5	8
CV10-2	220V	60Hz	1.5		28	27	26	25.5	24	23	22	20	19	16
CV10-3	220V	60Hz	2.2		43	41	40	38	36	35	33	30	28	24
CV10-4	380V	60Hz	3.0		57	55	53	51	48	47	44	40	37	32
CV10-5	380V	60Hz	3.0		71	69	67	64	60	58	55	50	46	40
CV10-6	380V	60Hz	4.0		82	82	80	77	73	70	66	60	56	48
CV10-7	380V	60Hz	5.5		100	96	93	90	85	82	77	70	65	56
CV10-8	380V	60Hz	5.5		114	110	107	104	97	94	88	80	74	64
CV10-9	380V	60Hz	5.5		128	124	120	115	109	106	99	90	84	72
CV10-10	380V	60Hz	7.5		142	137	133	128	121	117	100	100	93	80
CV10-12	380V	60Hz	7.5		171	165	160	151	145	141	132	121	111	96
CV10-14	380V	60Hz	11		202	192	187	184	170	164	154	141	130	112
CV10-16	380V	60Hz	11		228	220	214	205	194	188	175	163	149	128
CV10-17	380V	60Hz	11		242	234	227	218	206	200	187	173	158	136

Model	Voltage	Frequency	Power P2(kW)	Q (m³/h)	10	12	14	15	16	18	20	22	24	26
CV15-1	220V	60Hz	1.5	H (m)	18.3	18	17.5	17	16.5	16	15	14	12.5	10.5
CV15-2	380V	60Hz	3.0		36.5	36	35	34	33	32	30	27	25	21
CV15-3	380V	60Hz	4.0		55	54	52	51.5	50	48	45	41	37	32
CV15-4	380V	60Hz	5.5		73	72	70	69	66	64	60	55	49	42
CV15-5	380V	60Hz	7.5		92	89	87	86	83	80	74	69	62	53
CV15-6	380V	60Hz	11		110	107	105	103	100	96	89	83	74	64
CV15-7	380V	60Hz	11		128	125	122	120	117	112	104	97	86	74
CV15-8	380V	60Hz	11		146	143	140	138	133	128	119	110	98	85
CV15-9	380V	60Hz	15		165	161	157	155	150	144	134	124	111	96
CV15-10	380V	60Hz	15		183	179	175	172	167	160	149	138	123	106
CV15-12	380V	60Hz	18.5		220	215	210	207	200	192	179	166	148	128

available also in 50HZ

VERTICAL MULTISTAGE PUMP

Technical parameter

Model	Voltage	Frequency	Power P2(kW)	Q (m³/h)	12	16	20	24	28	32	34
CV20-1	220V	60Hz	2.2	H (m)	19	18	17	15	13	11	8.5
CV20-2	380V	60Hz	4.0		37	36	34	30	26	22	17
CV20-3	380V	60Hz	5.5		56	54	50	45	38	31	25
CV20-4	380V	60Hz	7.5		75	72	67	60	51	42	34
CV20-5	380V	60Hz	11		94	90	84	75	64	52	42
CV20-6	380V	60Hz	11		113	108	100	90	77	63	51
CV20-7	380V	60Hz	15		132	126	117	105	90	73	60
CV20-8	380V	60Hz	15		150	144	134	120	102	84	68
CV20-10	380V	60Hz	18.5		188	180	168	150	128	105	85

Model	Voltage	Frequency	Power P2(kW)	Q (m³/h)	20	24	28	32	36	40	44	48
CV32-1-1	220V	60Hz	2.2	H (m)	20	19	18	17	16	15	13	11
CV32-1	380V	60Hz	3.0		26	25	24	22	21	19	18	15
CV32-2-2	380V	60Hz	5.5		40	38	36	34	31	28	24	20
CV32-2-1	380V	60Hz	5.5		46	44	42	40	37	34	30	26
CV32-2	380V	60Hz	7.5		50	49	47	45	42	39	35	31
CV32-3-2	380V	60Hz	11		62	59	57	53	49	45	41	37
CV32-3	380V	60Hz	11		72	70	67	62	57	51	46	40
CV32-4-2	380V	60Hz	11		87	82	78	73	66	59	51	44
CV32-4	380V	60Hz	15		98	94	90	83	75	66	57	47
CV32-5-2	380V	60Hz	15		113	109	103	95	86	75	64	51
CV32-5	380V	60Hz	18.5		124	120	113	106	96	83	70	57
CV32-6-2	380V	60Hz	18.5		139	134	128	119	107	93	78	62
CV32-6	380V	60Hz	18.5		150	146	139	129	118	103	88	70
CV32-7-2	380V	60Hz	22		164	160	153	144	132	116	98	78
CV32-7	380V	60Hz	22		177	170	163	154	142	127	109	89
CV32-8-2	380V	60Hz	30		190	184	177	168	155	140	120	99
CV32-8	380V	60Hz	30		201	196	189	179	167	150	130	109
CV32-9-2	380V	60Hz	30		215	209	201	191	178	160	140	119
CV32-9	380V	60Hz	30		226	220	212	203	190	172	150	128
CV32-10-2	380V	60Hz	30		240	234	227	217	202	186	162	136

Model	Voltage	Frequency	Power P2(kW)	Q (m³/h)	30	35	40	42	45	50	55	60	65
CV45-1-1	380V	60Hz	5.5	H (m)	29	25	27	26	25	23	21	19	16
CV45-1	380V	60Hz	7.5		34	33	32	31.5	30	29	27	25	22
CV45-2-2	380V	60Hz	11		57	55	53	52	49	46	43	38	33
CV45-2	380V	60Hz	15		69	67	65	63	61	59	55	50	44
CV5-3-2	380V	60Hz	18.5		90	88	85	83	80	75	72	63	55
CV45-3	380V	60Hz	18.5		102	100	97	95	92	88	82	76	68
CV45-4-2	380V	60Hz	22		125	121	118	115	112	105	98	89	78
CV45-4	380V	60Hz	30		136	133	129	126	123	117	112	102	89
CV45-5-2	380V	60Hz	30		159	154	149	146	142	134	121	115	99
CV45-5	380V	60Hz	30		171	166	161	158	154	145	138	126	112
CV45-6-2	380V	60Hz	37		194	188	182	178	173	163	155	139	122
CV45-6	380V	60Hz	37		205	200	193	190	186	176	166	152	134
CV45-7-2	380V	60Hz	45		227	220	213	210	205	193	182	165	144
CV45-7	380V	60Hz	45		239	232	226	221	216	204	194	178	157

Model	Voltage	Frequency	Power P2(kW)	Q (m³/h)	40	50	60	65	70	80	90	100
CV64-1-1	380V	60Hz	7.5	H (m)	26	25	23	22	21	18	14	10
CV64-1	380V	60Hz	11		37	35	33	32	31	28	24	21
CV64-2-2	380V	60Hz	15		53	50	47	44	42	37	31	23
CV64-2	380V	60Hz	22		74	72	67	64	62	57	51	42
CV64-3-2	380V	60Hz	22		93	88	80	76	72	65	56	45
CV64-3	380V	60Hz	30		112	108	100	96	93	86	77	65
CV64-4-2	380V	60Hz	37		130	124	115	110	103	94	83	66
CV64-4	380V	60Hz	45		152	144	135	130	123	114	102	86
CV64-5-2	380V	60Hz	45		172	162	151	144	137	126	112	91

available also in 50HZ

VERTICAL MULTISTAGE PUMP

Technical parameter

Model	Voltage	Frequency	Power P2(kW)	Q (m³/h)	60	70	80	85	90	100	110	120	130
CV90-1-1	380V	60Hz	11	H (m)	31	27	25	24	23	21	18	14	9
CV90-1	380V	60Hz	15		36	35	33	31	30	29	26	23	18
CV90-2-2	380V	60Hz	18.5		59	57	54	51	48	44	39	32	22
CV90-2-1	380V	60Hz	22		67	65	62	59	57	51	47	41	33
CV90-2	380V	60Hz	30		76	73	69	66	64	60	56	52	44
CV90-3-2	380V	60Hz	37		98	94	88	85	82	75	69	59	46
CV90-3-1	380V	60Hz	37		108	104	98	94	90	83	78	69	56
CV90-3	380V	60Hz	45		116	111	105	102	97	93	88	79	69
CV90-4-2	380V	60Hz	45		141	135	128	124	118	109	102	89	72

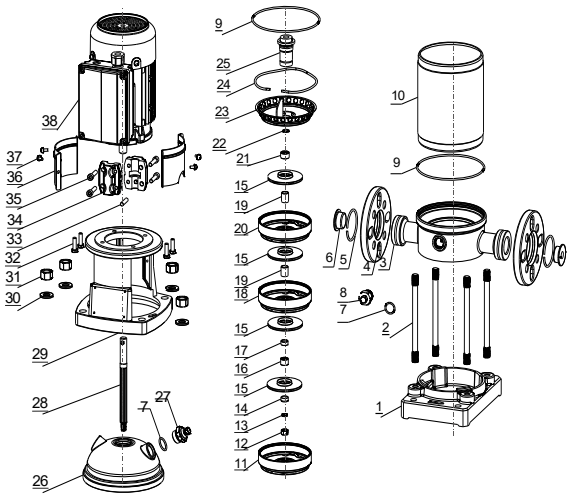

EXPLODED VIEW DRAWING - SPARE PARTS

No.	Description	No.	Description
1	Base	20	Middle section
2	Two-head bolt	21	Snap-ring seat
3	Pump body	22	Snap-ring
4	Flange	23	Outlet Section
5	Flange ring	24	Elastic ring
6	Dust cap	25	Mechanical Seal
7	O-Ring	26	Pump cover
8	Drain valve assembly	27	Release valve
9	O-Ring	28	Pump shaft
10	Housing	29	Motor base
11	Inlet section	30	Washer
12	Locked Nut	31	Hexagonal Nut
13	Spring washer	32	Hexagonal bolt
14	Impeller Fix Ring	33	Cylindrical pin
15	Impeller	34	Coupling
16	Bearing sleeve	35	Hexagon socket head cap screw
17	Short sleeve	36	Protective cover
18	Diffusor with bearing	37	Screw and washer
19	Long sleeve	38	O-Ring

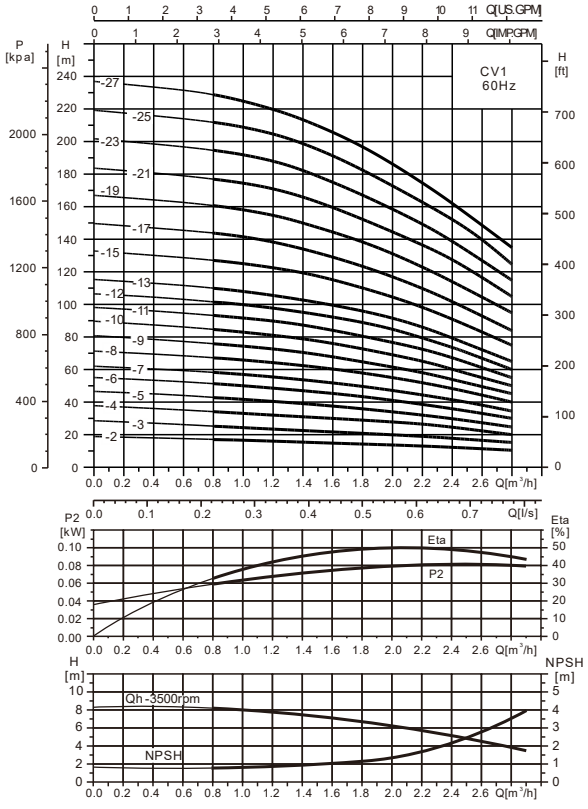

available also in 50HZ

VERTICAL MULTISTAGE PUMP

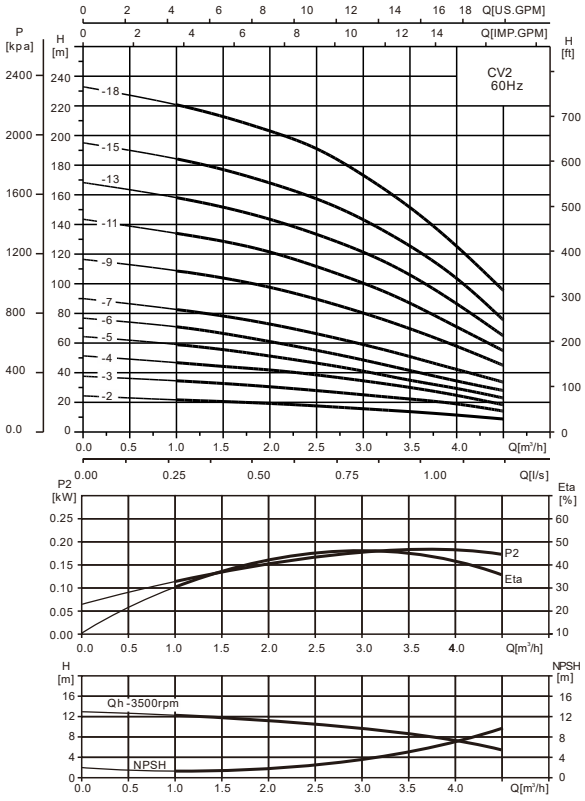

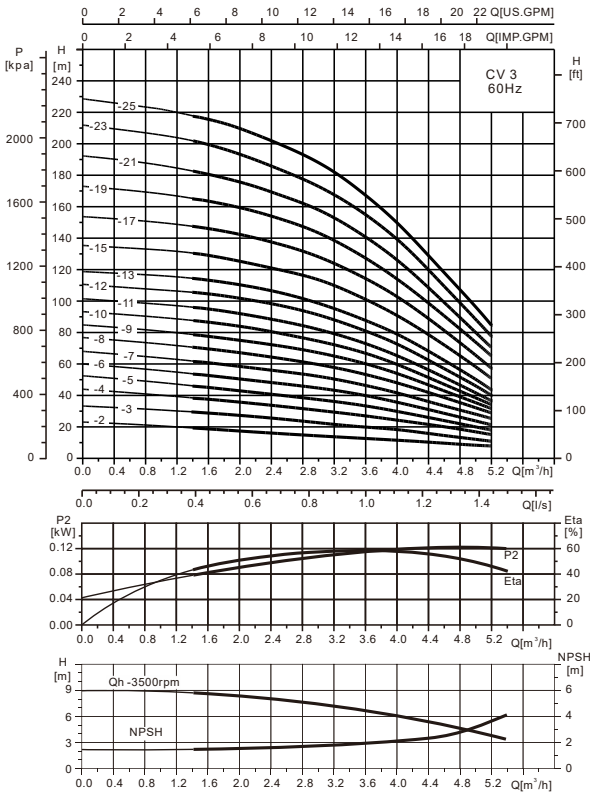

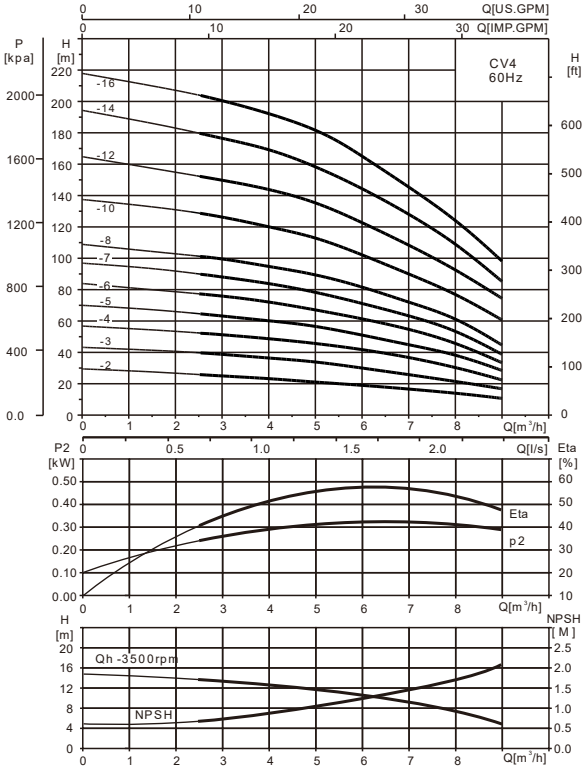

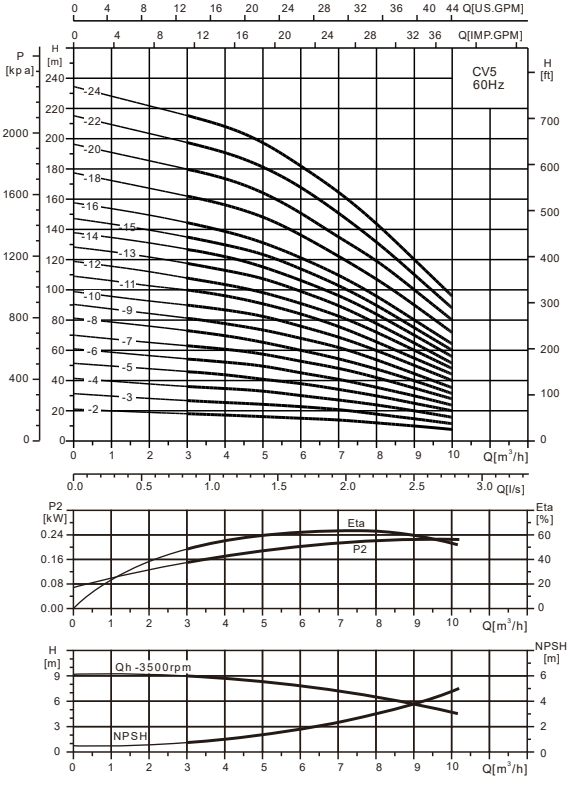

available also in 50HZ

VERTICAL MULTISTAGE PUMP

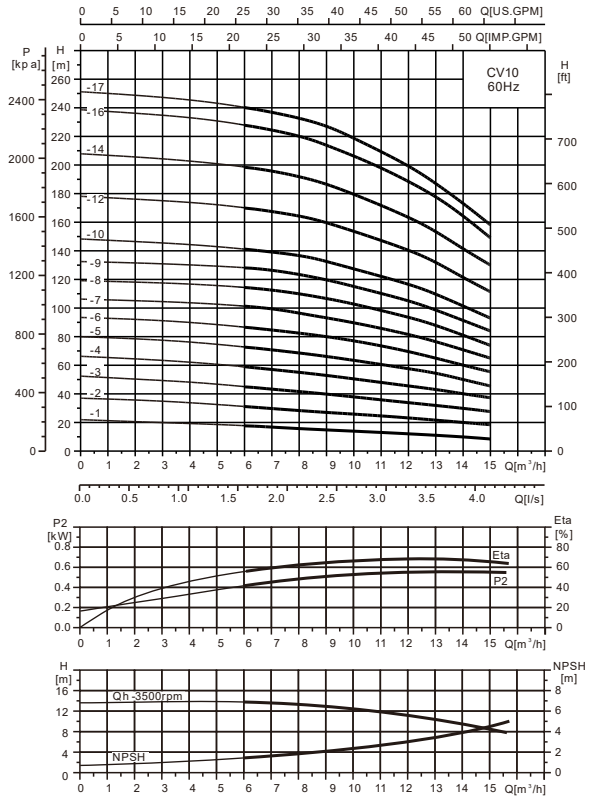

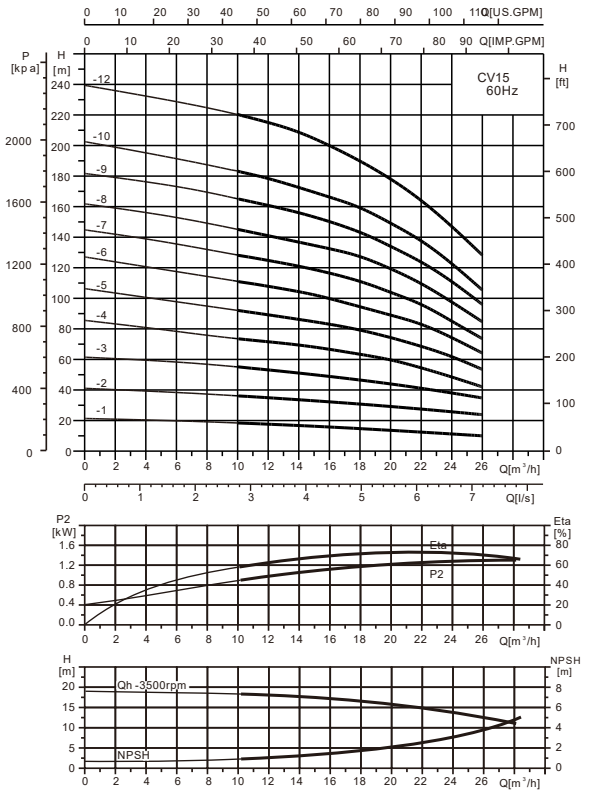

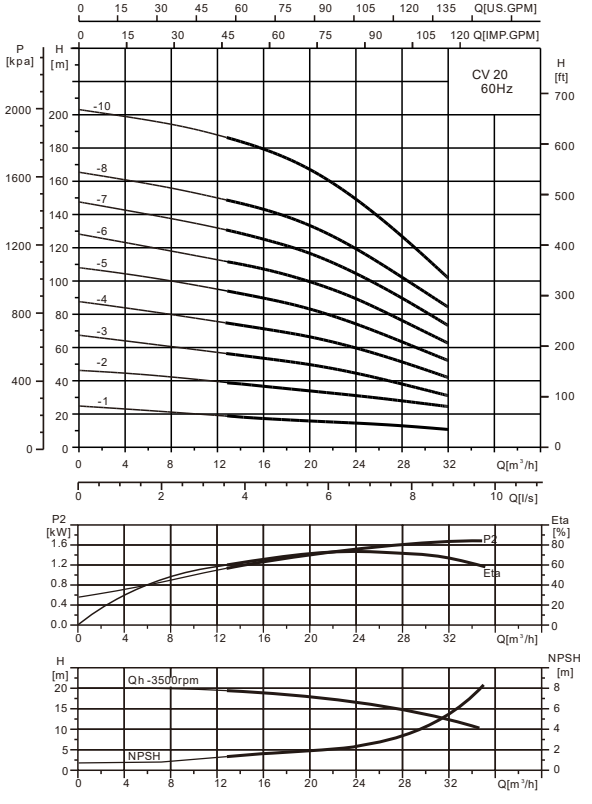

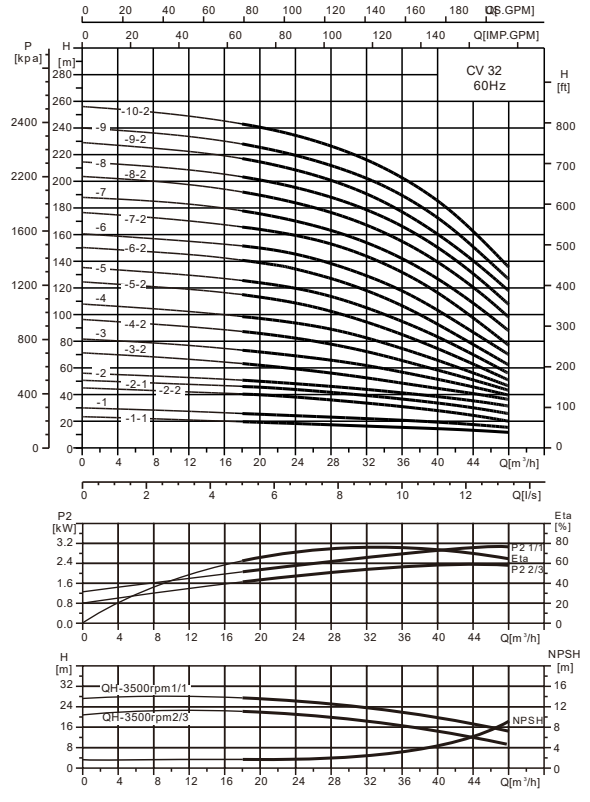

available also in 50HZ

VERTICAL MULTISTAGE PUMP

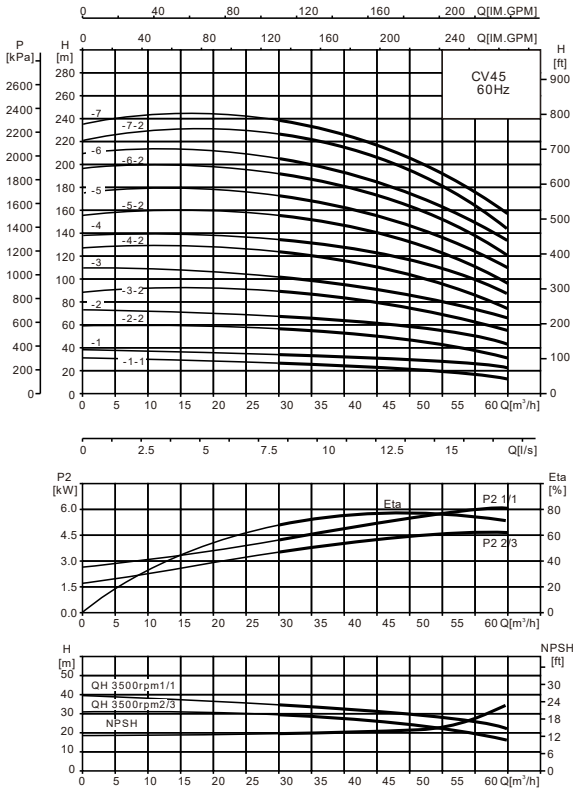

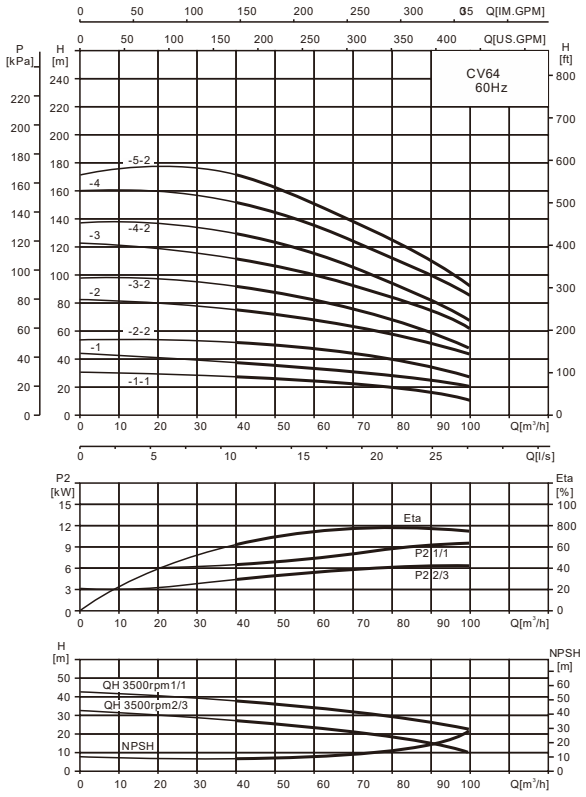

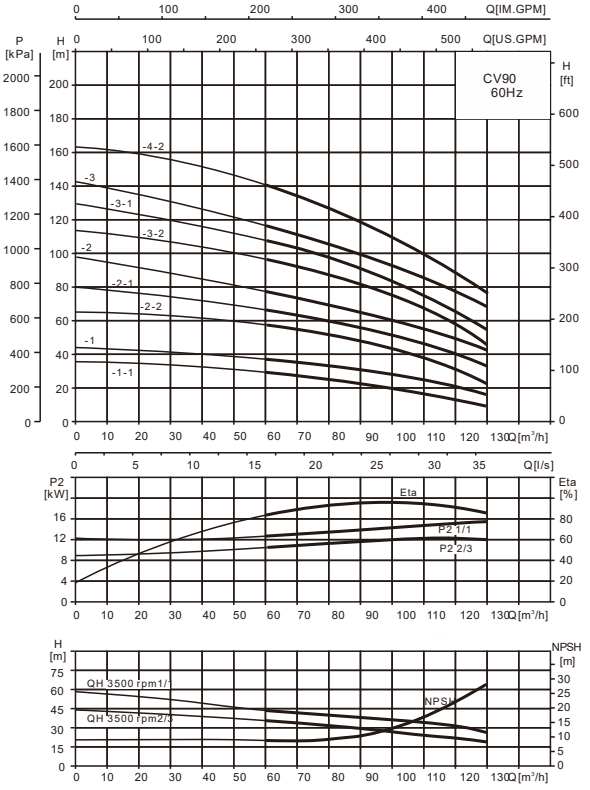

available also in 50HZ

HORIZONTAL MULTISTAGE PUMP

Horizontal multistage pumps suitable for household water supply, equipment support, pipeline pressurization, garden watering, vegetable greenhouse watering, fish farming and poultry raising, industrial and mining, water supply and drainage of enterprises and high-rise buildings, central air conditioner and centralized heating circulation system, etc.

Technical parameter

Model	Power P_2	Rated flow	Rated head	Model	Power P_2	Rated flow	Rated head
	kW	m³/h	m		Kw	m³/h	m
CM2-20(T)	0.37	2	20	CM4-20(T)	0.75	4	24
CM2-30(T)	0.55		31	CM4-30(T)	1.0		36
CM2-40(T)	0.75		42	CM4-40(T)	1.1		42
CM2-50(T)	0.75		51				
CM2-60(T)	1.0		63				
CM8-10(T)	1.0	8	18	CM8-10B(T)	0.75	8	12
CM8-15(T)	1.5		28	CM8-20B(T)	1.5		25
CM8-20(T)	1.85		36	CM8-30B(T)	2.2		39
CM8-25(T)	2.2		46	CM8-40BT	3.0		52
CM8-30(T)	3.0		58	CM8-50BT	3.0		65
CM12-10(T)	1.5	12	18	CM10-10B(T)	1.1	12	15
CM12-15(T)	2.2		34	CM10-20B(T)	2.2		31
CM12-20T	3.0		36	CM10-30BT	3.0		48
				CM10-40BT	4.0		48
CM16-10(T)	1.5	16	14	CM20-10(T)	1.85	20	16
CM16-20T	3.0		28	CM20-20(T)	4.0		32
CM16-30T	4.0		42				

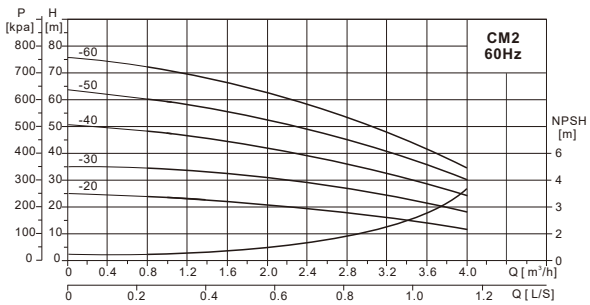

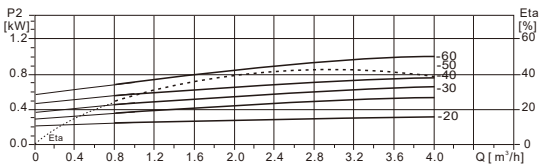

available also in 50HZ

HORIZONTAL MULTISTAGE PUMP

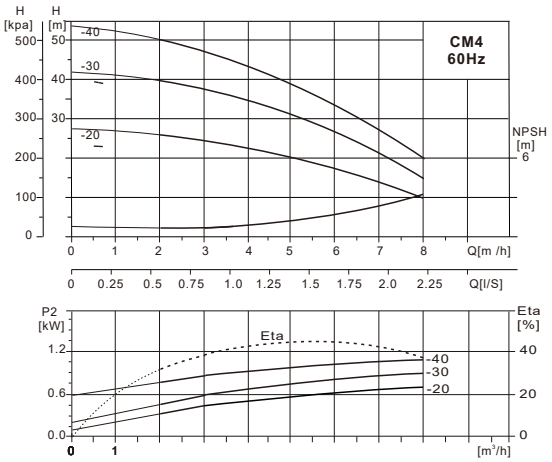

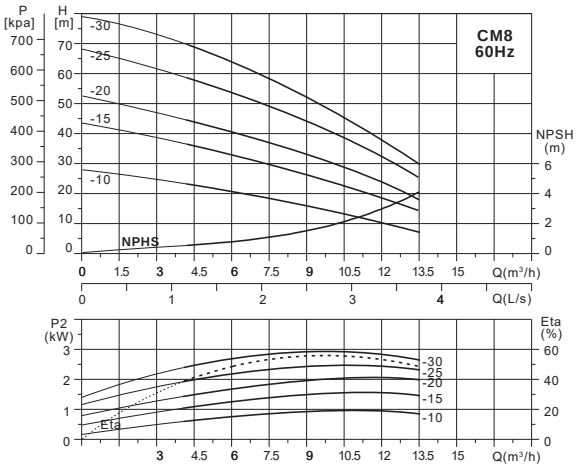

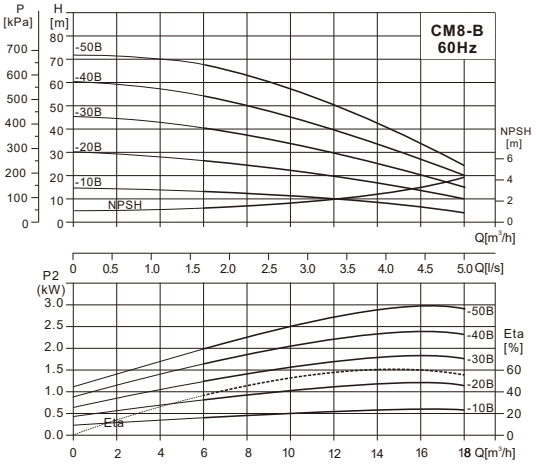

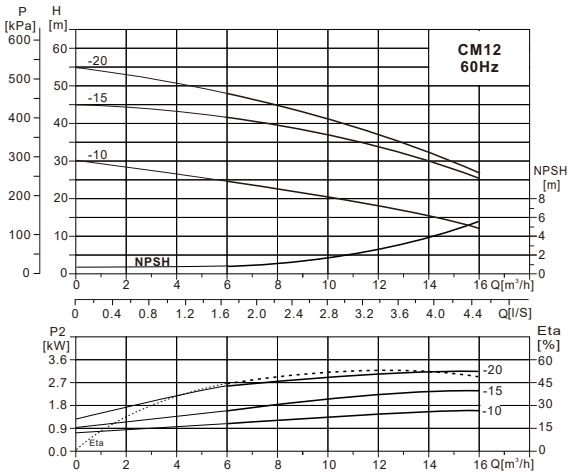

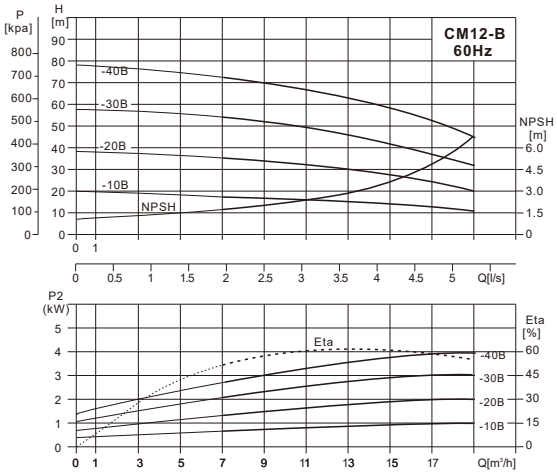

available also in 50HZ

HORIZONTAL MULTISTAGE PUMP

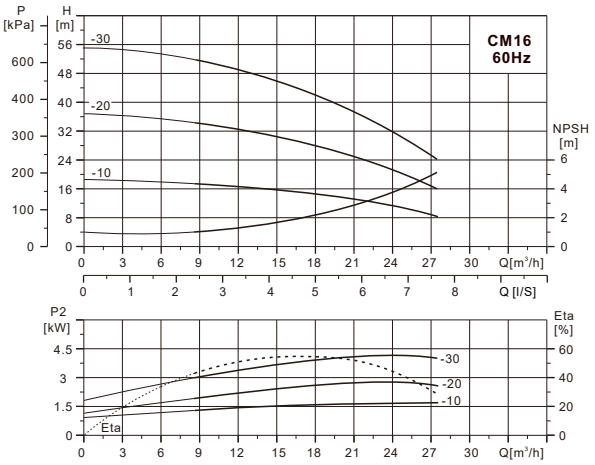

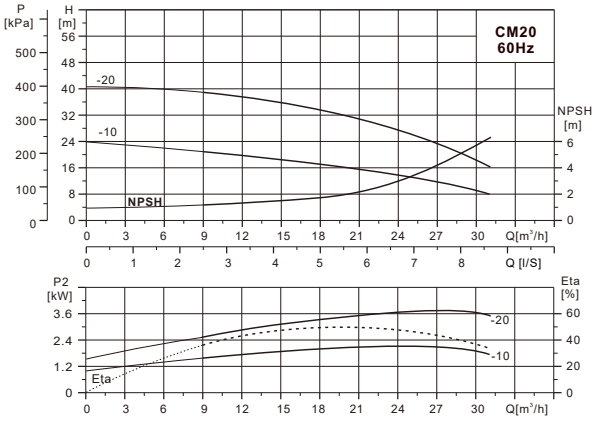

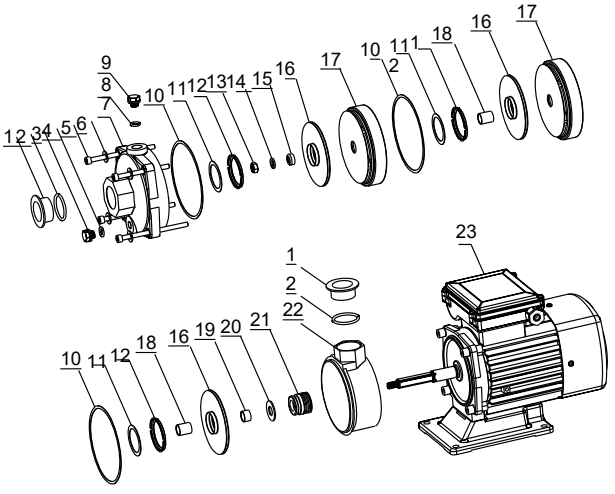

EXPLODED VIEW DRAWING - SPARE PARTS

No.	Description	No.	Description
1	Dust cap	13	Locked Nut
2	O-Ring	14	Spring washer
3	Plug	15	Impeller Fix Ring
4	O-Ring	16	Impeller
5	Inside hexagonal bolt	17	Middle section
6	Spring washer	18	Long sleeve
7	Inlet Section	19	Short sleeve
8	O-Ring	20	Axes Washer
9	Plug	21	Mechanical Seal
10	Seal gasket	22	Outlet section
11	Impeller seal Ring	23	Motor
12	Mouth piece outer ring		

available also in 50HZ

HYDROMASSAGE BATHTUB PUMP

Hydromassage bathtub pumps is most suitable for hydromassage bathtub and sea water convey; Weak corrosive liquid (weak acid and weak alkali) without solid granules.

Technical parameter

Model	Voltage	Frequency	Power P1		Power P2		Current	Max head	Max flow	Fitting size
			kW	HP	Kw	HP	Amp	m	L/min	mm
WDA100	220-240V	60Hz	0.55	0.75	0.75	1.00	3.80	11.00	340	48.5 or 50
WDA150	220-240V	60Hz	0.90	1.20	1.10	1.50	5.00	16.00	420	

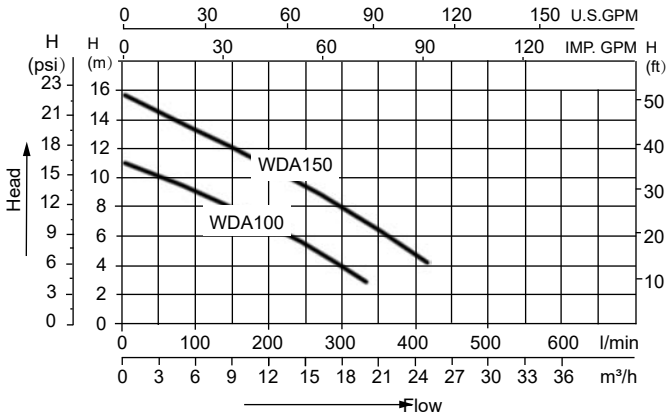

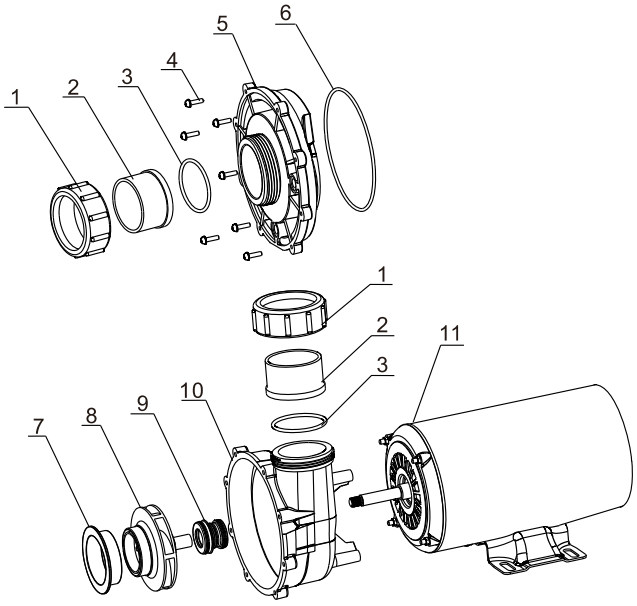

EXPLODED VIEW DRAWING - SPARE PARTS

No.	Description	No.	Description
1	Tie-in Nut	8	Impeller
2	Tie	9	Mechanical Seal
3	O-Ring	10	Casing
4	Cross recessed pan head screw and washer assemblies	11	Motor
5	Pump Cover		
6	O-Ring		
7	Activities Rings		

available also in 50HZ

SWIMMING POOL PUMP

Swimming pool pumps are applied to liquid circulation and filtration of Spa and bath, swimming pools, water treatment facility and decoration pools, etc.

Technical parameter

Model	Voltage	Frequency	Power P1		Power P2		Current	Max head	Max flow	Fitting size
			kW	HP	Kw	HP	Amp	m	L/min	mm
SWIM050	220-240V	60Hz	0.75	1.00	0.55	0.75	3.80	13	340.00	48.5 or 50
SWIM075	220-240V	60Hz	0.90	1.20	0.65	0.85	4.60	15	370.00	48.5 or 50
SWIM100	220-240V	60Hz	1.10	1.50	0.75	1.00	5.80	18	390.00	48.5 or 50
SWIM150	220-240V	60Hz	1.50	2.00	1.10	1.50	7.00	19	470.00	48.5 or 50

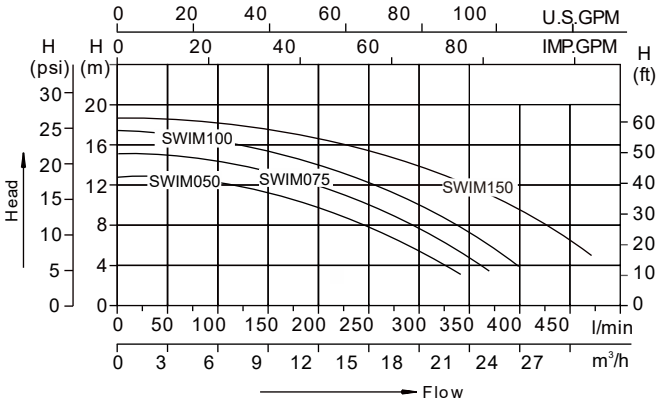

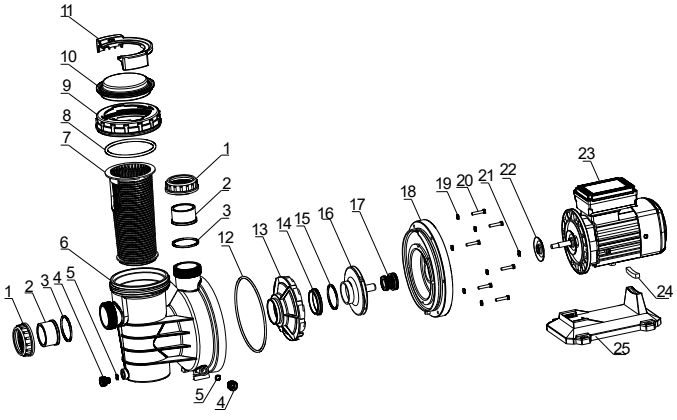

EXPLODED VIEW DRAWING - SPARE PARTS

No.	Description	No.	Description
1	Tie-in Nut	14	Activities Rings
2	Tie	15	O-Ring
3	O-Ring	16	Impeller
4	Drainge Plug	17	Mechanical Seal
5	O-Ring	18	Pump Cover
6	Pump Casing	19	Pad
7	Filter	20	Hexagon bolt
8	O-Ring	21	O-Ring
9	Gland cover	22	Retaining ring
10	Transparent cover	23	Motor
11	Open cover hand	24	Plastic strips
12	O-Ring	25	Base
13	Diffuser		

available also in 50HZ

SWIMMING POOL PUMP

Swimming pool pumps are applied to liquid circulation and filtration of Spa and bath, swimming pools, water treatment facility and decoration pools, etc.

Technical parameter

Model	Voltage	Frequency	Power P1		Power P2		Current	Max head	Max flow	Fitting size	Curves
			kW	HP	Kw	HP	Amp	m	L/min	mm	
SUA200-I	220-240V	60Hz	1.10	1.50	1.5	2.0	8.00	14.50	635	60.3 or 63	1
SUA300-I	220-240V	60Hz	1.50	2.00	2.2	3.0	10.00	18.00	710	60.3 or 63	2
SUA400-I	220-240V	60Hz	2.00	2.50	3.0	4.5	12.00	21.00	765	60.3 or 63	3
SUA200-II	220-240V	60Hz	0.18	0.25	0.37	0.5	(Low speed)3.0	3.00	280	60.3 or 63	4
	220-240V	60Hz	1.10	1.50	1.5	2.00	(High speed)8.0	14.50	635	60.3 or 63	1
SUA300-II	220-240V	60Hz	0.22	0.30	0.6	0.75	(Low speed)3.5	3.50	300	60.3 or 63	5
	220-240V	60Hz	1.50	2.00	2.2	3.00	(High speed)10	18.00	710	60.3 or 63	2
SUA400-II	220-240V	60Hz	0.30	0.40	0.6	0.75	(Low speed)4.4	4.00	350	60.3 or 63	6
	220-240V	60Hz	2.00	2.50	3.0	4.50	(High speed)12	21.00	765	60.3 or 63	3

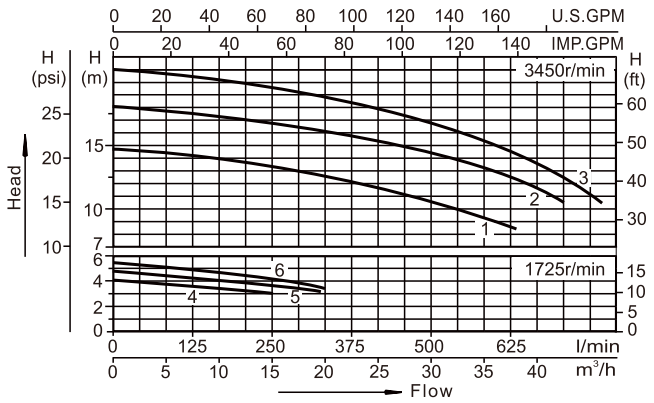

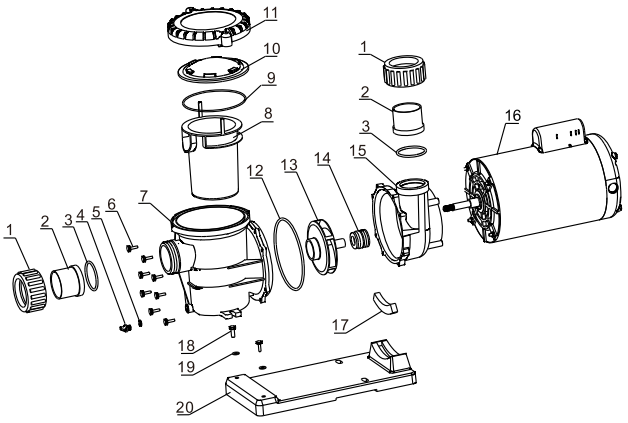

EXPLODED VIEW DRAWING - SPARE PARTS

No.	Description	No.	Description
1	Tie-in Nut	11	Gland Cover
2	Tie	12	O-Ring
3	O-Ring	13	Impeller
4	Drainge Plug	14	Mechanical seal
5	O-Ring	15	Pump Casing
6	Hexangon head bolt and plain washer assembling	16	Motor
7	Pump Cover	17	Block Gine
8	Filter	18	Hexagon bolt
9	Transparent cover pad	19	Washer
10	Transparent Cover	20	Foot

available also in 50HZ

SPA PUMP

SPA pumps are most suitable for SPA pools, swimming pools spraying, and swimming pools. Convey liquid without particles and weak corrosivity (weak acid, weak base). Suitable for circulation in cooling equipment of plant.

Technical parameter

Model	Voltage	Frequency	Power P1		Power P2		Current	Max head	Max flow	Fitting size	Curves
			kW	HP	Kw	HP	Amp	m	L/min	mm	
48WUA0753C-Ⅰ	115/220V	60HZ	0.55	0.75	1.1	1.5	10/5.0	14	460	60.3 or 63	1
48WUA1003C-Ⅰ	115/220V	60HZ	0.8	1	1.5	2	12/6.0	16	500	60.3 or 63	2
48WUA1653C-Ⅰ	115/220V	60HZ	1.25	1.65	1.85	2.5	17/8.5	19	600	60.3 or 63	4
48WUA2002C-Ⅰ	220V	60HZ	1.5	2	2.2	3	10	20	720	60.3 or 63	5
48WUA1001C-Ⅱ	115V	60HZ	0.08	0.12	0.18	0.35	(Low speed)3.8	3	200	60.3 or 63	6
			0.75	1	1.1	1.5	(High speed)10.3	14	460	60.3 or 63	1
48WUA1501C-Ⅱ	115V	60HZ	0.15	0.18	0.25	0.45	(Low speed)3.8	3.5	245	60.3 or 63	7
			1.1	1.5	1.5	2	(High speed)13.8	17	560	60.3 or 63	3
48WUA1002C-Ⅱ	220V	60HZ	0.08	0.12	0.18	0.35	(Low speed)2.0	3	200	60.3 or 63	6
			0.8	1	1.1	1.5	(High speed)5.2	14	460	60.3 or 63	1
48WUA1502C-Ⅱ	220V	60HZ	0.15	0.18	0.25	0.45	(Low speed)2.6	4.2	260	60.3 or 63	8
			1.1	1.5	1.85	2.5	(High speed)8.0	19	600	60.3 or 63	4
48WUA2002C-Ⅱ	220V	60HZ	0.2	0.25	0.35	0.65	(Low speed)3.0	4.5	320	60.3 or 63	9
			1.5	2	2.2	3	(High speed)10.0	20	720	60.3 or 63	5

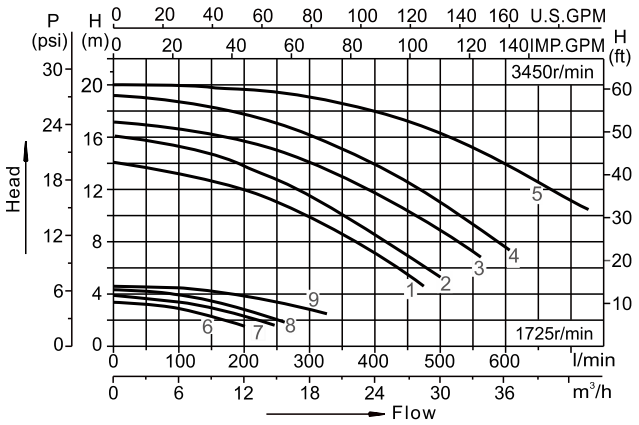

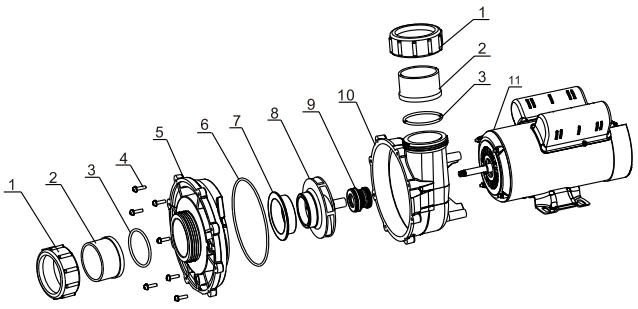

EXPLODED VIEW DRAWING - SPARE PARTS

No.	Description	No.	Description
1	Tie-in Nut	8	Impeller
2	Tie	9	Mechanical Seal
3	O-Ring	10	Casing
4	Cross recessed pan head screw and washer assemblies	11	Motor
5	Pump Cover		
6	O-Ring		
7	Activities Rings		

available also in 50HZ

CIRCULATION PUMP

Circulation Pumps can be used in single pipe or double pipe heating systems, cooling, air-conditioning, boilers and solar systems etc.

Technical parameter

Model	Voltage	Frequency	Power	Current	Q Max.	H Max.	Size	Pump length
			W	Amp	m³/h	m	inch	mm
RS15/4-130	220V	60HZ	72/53/38	0.33/0.24/0.17	2.3/1.7/0.8	4.5/4/3	G1"	130
RS25/4-130	220V	60HZ	72/53/38	0.33/0.24/0.17	2.9/2.1/1.3	4.5/4/3	G1 1/2"	130
RS25/4-180	220V	60HZ	72/53/38	0.33/0.24/0.17	3.4/2.3/1.3	4.5/4/3	G1 1/2"	180
RS32/4-180	220V	60HZ	72/53/38	0.33/0.24/0.17	3.4/2.3/1.3	4.5/4/3	G2"	180
RS15/6-130	220V	60HZ	93/67/46	0.43/0.30/0.21	2.6/2.0/1.2	6/5/3	G1"	130
RS25/6-130	220V	60HZ	93/67/46	0.43/0.30/0.21	3.3/2.3/1.3	6/5/3	G1 1/2"	130
RS25/6-180	220V	60HZ	93/67/46	0.43/0.30/0.21	3.9/2.9/1.6	6/5/3	G1 1/2"	180
RS32/6-180	220V	60HZ	93/67/46	0.43/0.30/0.21	3.9/2.9/1.6	6/5/3	G2"	180
RS25/8-180	220V	60HZ	182/170/145	0.83/0.77/0.66	6.9/5.7/2.7	8/7.5/6.5	G1 1/2"	180
RS32/8-180	220V	60HZ	270/210/150	1.23/0.95/0.68	9.6/6.2/2.5	8/7.5/6.5	G2"	180

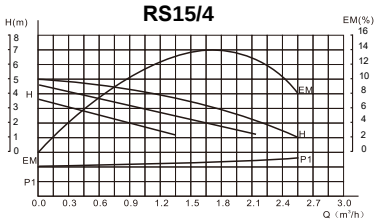

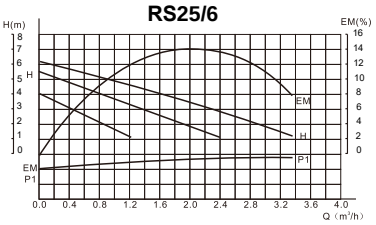

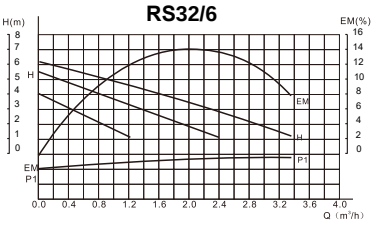

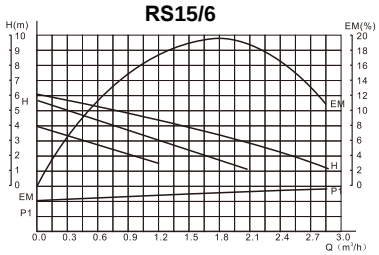

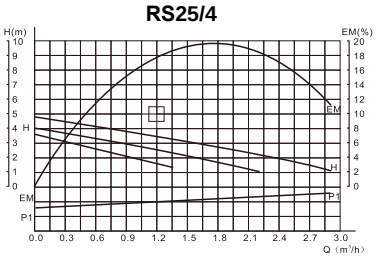

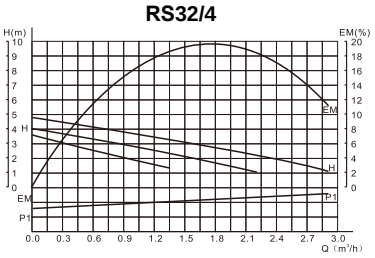

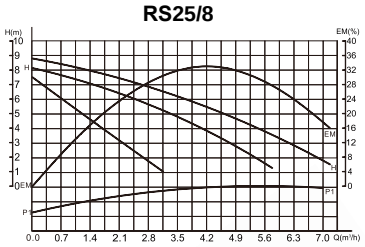

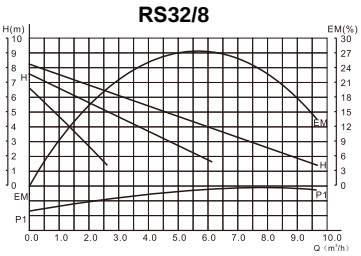

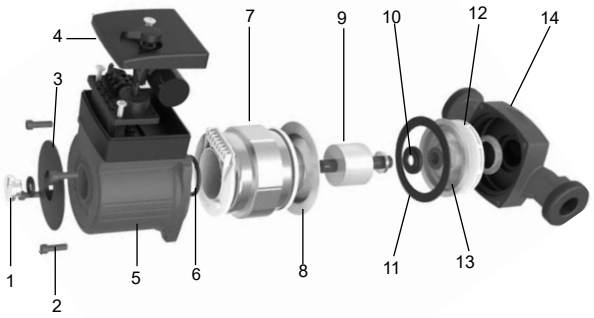

EXPLODED VIEW DRAWING - SPARE PARTS

No.	Description.	No.	Description.
1	Screw	8	Cover
2	Screw	9	Rotor
3	Nameplate	10	Bearing
4	Terminal box	11	Seal
5	Housing	12	Impeller
6	Seal	13	Cover
7	Stator	14	Pump body

available also in 50HZ

CIRCULATION PUMP

Circulation Pumps can be used in single pipe heating system, double pipe heating system, floor heating system, domestic hot water setback.

Technical parameter

Model	Voltage	Frequency	Power	Current	Q Max.	H Max.	Size	Pump length
			W	Amp	m³/h	m	inch	mm
RS15/4-130EA	220V	60HZ	5-22	0.02-0.10	1.8	4	1"	130
RS25/4-130EA	220V	60HZ	5-22	0.02-0.10	2.6	4	1 1/2"	130
RS25/4-180EA	220V	60HZ	5-22	0.02-0.10	2.6	4	1 1/2"	180
RS32/4-180EA	220V	60HZ	5-22	0.02-0.10	3	4	2"	180
RS15/6-130EA	220V	60HZ	5-45	0.02-0.20	2.4	6	1"	130
RS25/6-130EA	220V	60HZ	5-45	0.02-0.20	3.6	6	1 1/2"	130
RS25/6-180EA	220V	60HZ	5-45	0.02-0.20	3.6	6	1 1/2"	180
RS32/6-180EA	220V	60HZ	5-45	0.02-0.20	3.6	6	2"	180
RS25/8-180EA	220V	60HZ	5-130	0.02-0.59	7.5	8	1 1/2"	180
RS32/8-180EA	220V	60HZ	5-130	0.02-0.59	10.2	8	2"	180

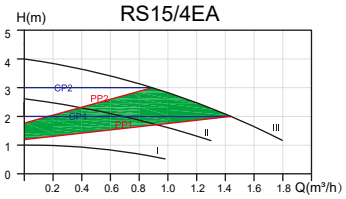

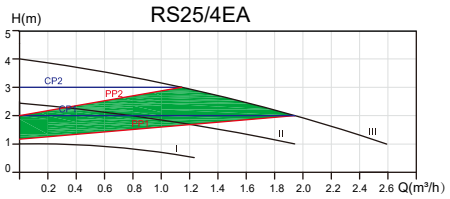

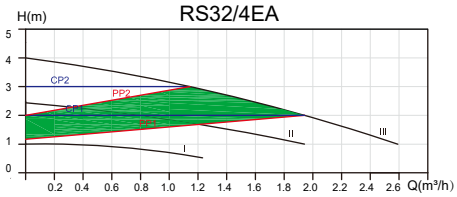

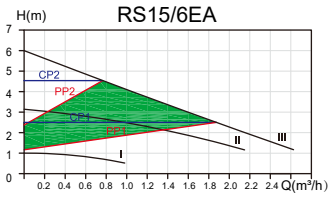

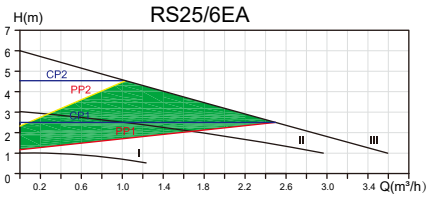

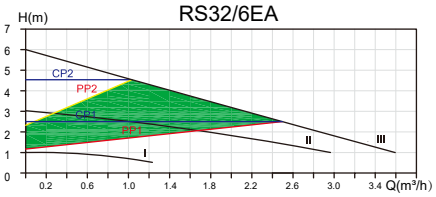

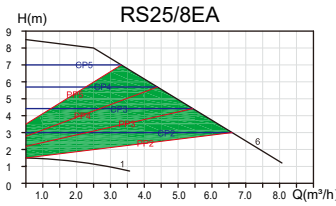

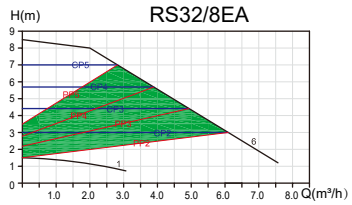

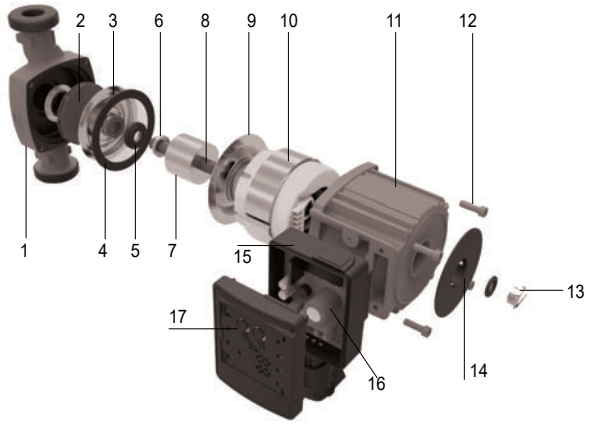

EXPLODED VIEW DRAWING - SPARE PARTS

No.	Description.	No.	Description.
1	Pump body	10	Stator
2	Impeller	11	Housing
3	Cover	12	Screw
4	Bearing	13	Screw
5	Gasket	14	Nameplate
6	Bearing	15	Seat of terminal box
7	Rotor	16	PCB
8	Shaft	17	Cover of terminal box
9	Cover		

available also in 50HZ

PUMPS ACCESSORIES

Electric pressure control used in water systems. It starts the electric pump automatically after a pressure decrease (taps opened) and stops it when the fluid flow interrupts at the maximum pressure level of the electric pump (taps closed). Completely replaces traditional pump control system composed of pressure switch, pressure tank and check valve, etc. Stops the water pump in the case of water shortage

Technical parameter

MODEL	Voltage	Frequency	Max Current	Max Power	Starting Pressure	Max Working Pressure	Max Working Temperature	Connection Thread	Protection Rating
			Amp	kW	Bar	Bar	℃		
EPC-1/2/3/5	220-240V	60Hz	10A	1.1	1.2, 1.5, 2.2	10	55	G 1"	IP65
	110-120V	60Hz	10A	0.55	1.2, 1.5, 2.2	10	55		
	110-240V	60Hz	10A	1.1	1.2, 1.5, 2.2	10	55		

EPC-1

EPC-2

EPC-3

EPC-5

Pressure control used in water systems. It starts and stops the water pump automatically according to the setting pressure.

Technical parameter

MODEL	Voltage	Frequency	Max Current	Max Power	Mini. cut-in	Max. cut-in	Pressure range	Connection Thread
			Amp	kW	PSI	PSI	PSI	
KRS-1	110V	60Hz	17	1.1	20	175	20-40, 30-50, 40-60, 50-70	NPT1/4"
KRS-3	110V	60Hz	12	1.1	20	120	20-40, 30-50, 40-60, 50-70	NPT1/4"
KRS-5	110V	60Hz	17	1.1	20	175	20-40, 30-50, 40-60, 50-70	NPT1/4"

KRS-1

KRS-3

PA66 flange

steel flange

KRS-5

Float control connected to an electrical pump through an electrical cable,is used for the auto-control and no water protection of the water tower and water pool.
Fix the counterweight on the power cable to control water level. (Counterweight is only provided atrequest.)
Connect the electrical cable with the electrical pump and then fix it inside the water tank.
The length of the cable section between the fixation point of the device and the device body determines the water level.
The terminal of the electrical cable shall never be immersed into water during installation.

Technical parameter

MODEL	Voltage	Frequency	Relay current	Max Working Temperature	Protection Rating
			Amp	℃	
FPS-1/2/3/4	250V	60Hz	16(8)	55	IP68

FPS-1

FPS-2

FPS-3

FPS-4

available also in 50HZ

ACCESSORIES

Electric pressure control

Technical parameter

Model	Pressure Range bar		Differential bar		Factory Setting bar		Max. Bellows Press.	Connector
	Min	Max	Min	Max	OFF	ON	bar	
HLP503	-0.7	3	0.2	1.5	2	1	16.5	NPT1/4" or NPT7/16"
HLP506	-0.7	6	0.6	4	3	2	16.5	NPT1/4" or NPT7/16"
HLP506M	-0.7	6	Duplicate voltage disparity≤1		3	Manual Reset	16.5	NPT1/4" or NPT7/16"
HLP110	1	10	1	3	6	5	16.5	NPT1/4" or NPT7/16"
HLP516	5	16	1	4	10	8	35	NPT1/4" or NPT7/16"
HLP520	5	24	2	5	16	13	35	NPT1/4" or NPT7/16"
HLP530D	5	30	5	10	20	15	35	NPT1/4" or NPT7/16"
HLP530	8	30	Fixed3-5		20	15-17	35	NPT1/4" or NPT7/16"
HLP530M	8	30	Duplicate voltage disparity≤4		20	Manual Reset	35	NPT1/4" or NPT7/16"

Flex hose

Technical parameter

Model	Length	Diameter	Material	Connector	
	cm	cm			
NK-SPFH-60-1	60	27	ALU wire+EPDM membrane+brass connector	NPT1"	straight+curve
NK-SPFH-100-1	100	27	ALU wire+EPDM membrane+brass connector	NPT1"	straight+curve
NK-SPFH-60-2	60	32	ALU wire+EPDM membrane+brass connector	NPT1"	straight+curve
NK-SPFH-60-4	60	32	ALU wire+EPDM membrane+brass connector	NPT1 1/4"	straight+straight
NK-SPFH-50-1	50	32	stainless steel 201+EPDM membrane+brass connector	NPT1"	straight+curve
NK-SPFH-80-1	80	32	stainless steel 202+EPDM membrane+brass connector	NPT1"	straight+curve
NK-SPFH-80-2	80	32	stainless steel 203+EPDM membrane+brass connector	NPT1"	straight+straight

Pressure tank

Technical parameter

Model	Capacity	Pre charge	Max working pressure	Material		Connector
	L	Bar	Bar	Flange	Membrance	
NK-H-24	24	1.5	8	Iron plating zinc white	EPDM	G 1"

5 way connector

Technical parameter

Model	Length	Weight	Material	Connector
	mm	g		
NK-SPBF-5	90	170	brass	NPT-F1"X F1"X M1"X F1/4"X M1/4"
NK-SPBF-5A	90	190	brass	NPT-F1"X F1"X M1"X F1/4"X M1/4"
NK-SPBF-5B	90	245	brass	NPT-F1"X F1"X M1"X F1/4"X M1/4"
NK-SPBF-5C	110	245	brass	NPT-F1"X F1"X M1"X F1/4"X M1/4"
NK-SPBF-5D	110	270	brass	NPT-F1"X F1"X M1"X F1/4"X M1/4"
NK-SPBF-5E	110	330	brass	NPT-F1"X F1"X M1"X F1/4"X M1/4"

available also in 50HZ