SUBMERSIBLE GRINDER PUMP

Submersible grinder pumps utilize a grinding mechanism in the suction port to crushsolid residuals into fine particles before discharging the waste.
Solid residuals are finely grinded by the built-in grinder mechanism and discharged by a vortex impeller.

50Hz - Technical parameter

Model	Voltage	Frequency	Power		Current	H.Max	Q.Max	Size	G.W
	V	Hz	kW	HP	Amp	m	m³/h	Inch	Kg
40G2.75	380	50	0.75	1	2	15	12	G 1-1/2"	24.5
40G2.75S	220	50	0.75	1	5.2	15	12	G 1-1/2"	25.5
40G21.1	380	50	1.1	1.5	2.8	17	13	G 1-1/2"	26
40G21.1S	220	50	1.1	1.5	7.2	17	13	G 1-1/2"	27
40G21.5	380	50	1.5	2	3.2	18	18	G 1-1/2"	39
40G22.2	380	50	2.2	3	5	26	20	G 1-1/2"	41.5
50G23.7	380	50	3.7	5	8.5	30	25	G 2"	58
50G25.5	380	50	5.5	7.5	11.7	42	25	G 2"	71

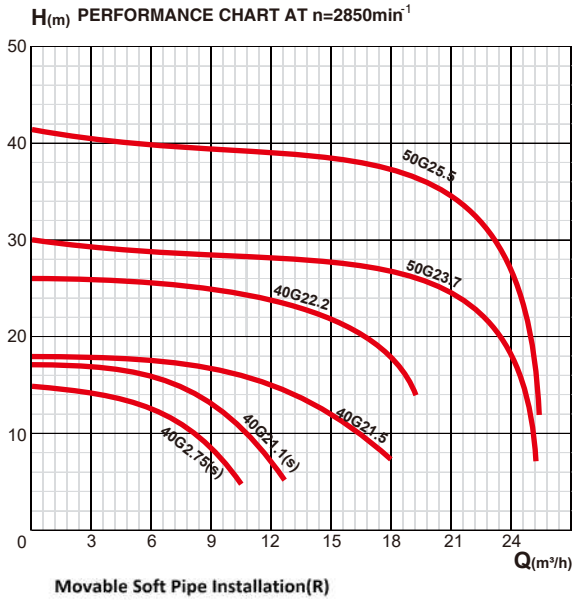

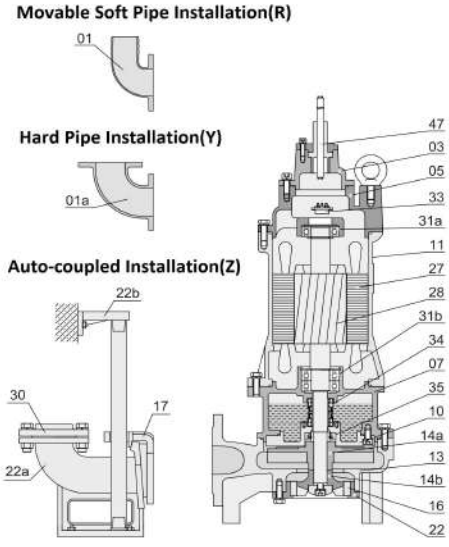

EXPLODED VIEW DRAWING - SPARE PARTS

No.	Description	No.	Description
01	Hose coupling	22	Seat assembly
01a	Hose coupling	22a	Coupling seat
03	Terminal box	22b	Upper guide support
05	Upper cover	27	Stator
07	Bearing house	28	Rotor
10	Seal bracket	30	Flange
11	Motor body	31a	Bearing
13	Pump body	31b	Bearing
14a	Impeller	33	Motor protector
14b	Rotationary blade	34	Mechanical seal
16	Stationary blade	35	Oil seal
17	Coupling adapter	47	Cable

available also in 60Hz