CASTING IRON PUMP

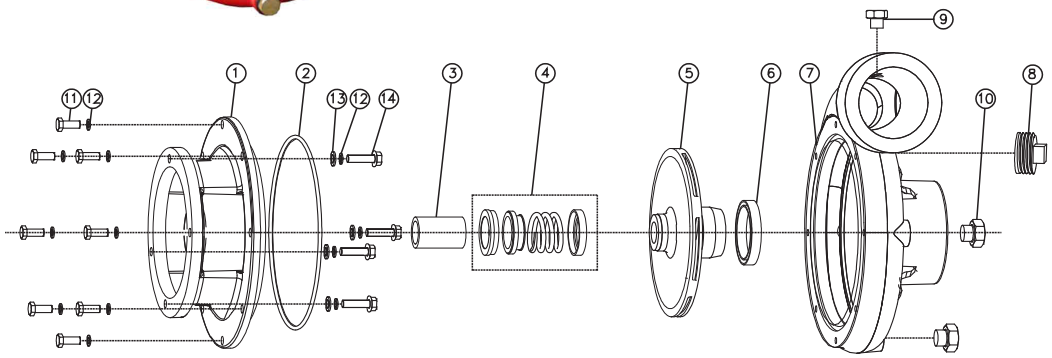

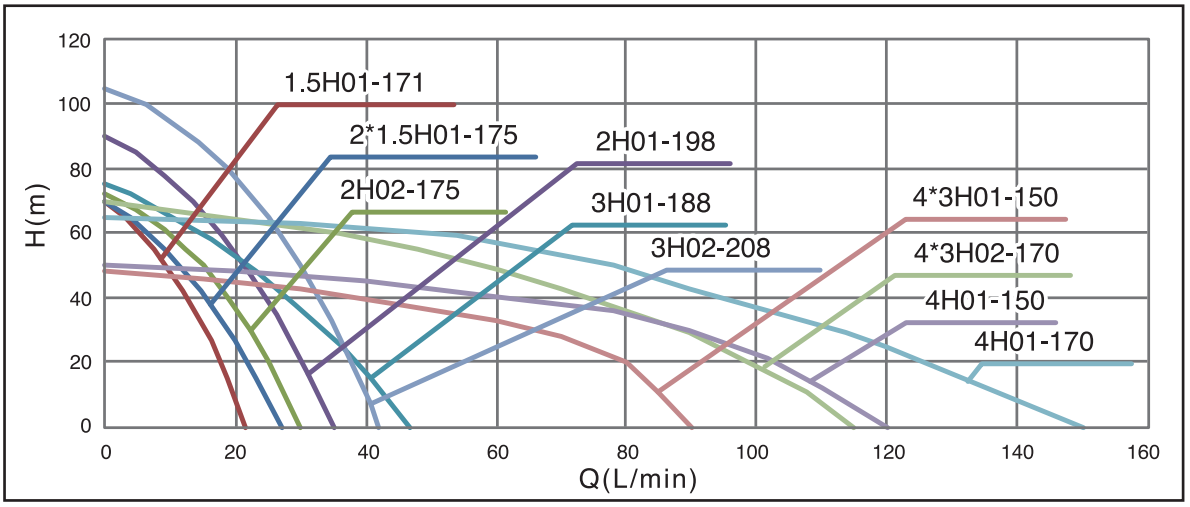

Model		1.5H 01-171	2*1.5H 01-175	2H 02-175	2H 01-198	3H 01-188	3H 02-208	4*3H 01-150	4*3H 02-170	4H 01-150	4H 01-170
Inlet Size	mm	40	50	50	50	80	80	100	100	100	100
Outlet Size	mm	40	40	50	50	80	80	80	80	100	100
Impeller Dia	mm	171	175	175	198	188	208	150	170	150	170
Speed	rpm	3600	3600	3600	3600	3600	3600	3600	3600	3600	3600
Curve power	HP	7	7	7	10	10	13	11	23	13	23
Max. Capacity	m^3/h	22	27	30	35	47	42	90	115	120	150
Pump Lift	m	70	70	72	90	75	105	48	70	50	65
Max. Suction Head	m	7	7	7	7	7	7	7	7	7	7